SUBDIVISION REGULATIONS

FOR

SMYRNA, TENNESSEE

Approved and Adopted by the Smyrna Municipal Planning Commission
On July 2, 2009

Smyrna Municipal Planning Commission:
Marc Adkins, Chair
Edwin Davenport, Vice-Chair
Bob Spivey, Mayor
Lance Lee, Councilman
Sam Coleman
Mike Sparks
Rob White

Originally Prepared By

Don E. Martin

Department of Economic and Community Development
Local Planning Office

Originally Approved and Adopted by the Smyna Municipal Planning Commission on October 3, 1996.

Subsequently amended on

- July 2002
- November 2003
- May 2005
- March 2006
- May 2007

Updated and Revised July 2009

Revision Committee:

Kevin Rigsby, Town Planner
Melissa Morrison, Planner
Jack Reinhard, Director of Utilities
Mark Parker, Assistant Director of Utilities
David King, Director of Public Works
Jerome Dempsey, Engineer of Record (Dempsey, Dilling and Associates)
Larry Goldman, Building Official
Michele Komorowski Elliott, Town Attorney
Alford Fann, Board of Zoning Appeals Representative
Tim Morrell, Planning Commission Representative
Butch Fish, Contractor Representative
Andy Johns, Builder Representative

TABLE OF CONTENTS

SMYRNA SUBDIVISION REGULATIONS

SECTION **Page**

ARTICLE 1

GENERAL PROVISIONS 6

1-101 Title 6
1-102 Authority 6
1-103 Jurisdiction 6
1-104 Policy and Purpose 6
1-105 Interpretation, Conflict, and Severability 7
1-106 Saving Provision 8
1-107 Repeal of Previous Regulations 9
1-108 Amendments 9
1-109 Enforcement, Violation and Penalties 10
1-110 Specific Statutory Remedies 12

ARTICLE 2

DEFINITIONS 13

2-101 Usage 13
2-102 Words and Terms Defined 13

ARTICLE 3

PROCEDURES 22

3-101 Conditions 22
3-102 General Procedure 22
3-103 Sketch Plat 25
3-104 Preliminary Plat (Major Subdivisions Only) 26
3-105 Final Subdivision Plat (Minor and Major Subdivisions) 28
3-106 Signing and Recording of Subdivision Plat 30
3-107 Development Agreement 31
3-108 Resubdivision of Land 31
3-109 Vacation of Plats 32

3-110 Variances 32

ARTICLE 4

SPECIFICATIONS FOR SUBMITTALS 34

4-101 Sketch Plat 34
4-102 Preliminary Plat 34
4-103 Construction Plans 37
4-104 Final Subdivision Plat 39

ARTICLE 5

REQUIREMENTS FOR IMPROVEMENTS, RESERVATIONS AND DESIGN 47

5-101 General Requirements 47
5-102 Lot Requirements 51
5-103 Public Ways 54
5-104 Road Construction Specifications 64
5-105 Drainage and Storm Sewers 65
5-106 Water Facilities 68
5-107 Sewage Facilities 69
5-108 Pedestrian Ways 70
5-109 Utility Easements 71
5-110 Public Uses 72
5-111 Preservation of Natural Features and Amenities 73
5-112 Nonresidential Subdivisions 73

ARTICLE 6

PUBLIC WORKS SPECIFICATIONS 75

General 75

6-101 Jurisdiction 75
6-102 Purpose 75
6-103 Definitions 75
6-104 Approvals 75
6-105 Acceptance 76
6-106 Responsibility of Compliance 76

Planning 77

6-201 Plan Preparations 77
6-202 Content 77
6-203 Submission, Review, and Approval 77
6-204 Action Upon Approval 77

Typical Sections 78

6-301 Drawings 78
6-302 Road Construction Specifications 110

Materials Specifications and Construction Procedures 111

6-401 Preliminary Work 111
6-402 Roadway Construction 112
6-403 Base and Paving 115
6-404 Drainage System Design 117
6-405 Final Dressing, Seeding, and Sodding 121

ARTICLE 7

ASSURANCE FOR COMPLETION AND MAINTENANCE OF IMPROVEMENTS 123

7-101 Improvements and Performance Bond 123
7-102 Inspection Improvements 125
7-103 Maintenance of Improvements 126
7-104 Deferral or Waiver of Required Improvements 126
7-105 Escrow Deposits for Lot Requirements 126
7-106 Issuance of Building Permits and Certificates of Occupancy 127

ARTICLE 8

ADOPTION OF REGULATIONS AND AMENDMENTS 128

8-101 Original Enactment 128

APPENDIX

POST-ADOPTION AMENDMENTS 129

INDEX

ARTICLE 1

GENERAL PROVISIONS

1-101 Title -- These regulations shall hereinafter be known and cited as the Subdivision Regulations of Smyrna, Tennessee.

1-102 Authority -- These subdivision regulations are adopted by the Smyrna Municipal Planning Commission (hereinafter referred to as "Planning Commission"), in pursuance of the authority and powers granted by Section 13-4-301 through 13-4-309, Tennessee Code Annotated. Having adopted a comprehensive plan, including a major thoroughfare and a land use plan for the jurisdictional area, having and filed a certified copy of the plan with the Rutherford County Register of Deeds (hereinafter referred to as "county register"), as required by Section 13-4-302, Tennessee Code Annotated, and having held a public hearing as indicated in Section 1-108.1 of these regulations, the Planning Commission has fulfilled the requirements set forth in state law as prerequisites to the adoption of these regulations.

1-103 Jurisdiction -- These subdivision regulations shall apply to all subdivisions, as herein defined, located within the corporate limits of Smyrna, Tennessee. No land shall be subdivided within the jurisdictional area until the subdivider submits a plat as required by these regulations, obtains Planning Commission approval of the plat, and files the approved plat with the county register.

1-104 Policy and Purpose -- It is hereby declared to be the policy of the Planning Commission to consider the subdivision of land and development of a subdivision plat as subject to the control of the adopted land use or community development plan (hereinafter referred to as "land development plan") of the jurisdictional area for orderly, planned, and efficient physical and economical development.

Land to be subdivided shall be of such character that it can be used for building purposes without danger of health, fire, flood, or other menace. Land shall not be subdivided until proper provisions have been made for drainage, water, sewerage, other public utilities, and for other required public services. The existing and proposed public improvements shall generally conform to and be properly related to the proposals shown in the land development plan.

The regulations herein shall supplement and facilitate the enforcement of the provisions and standards contained in the Town of Smyrna Muncipal Zoning Ordinance (hereinafter referred to as "zoning ordinance").

These regulations are adopted for the following purpose:

(1) To promote the public health, safety, and general welfare of the jurisdictional area.

(2) To guide the development of the jurisdictional area in accordance with the land development plan, considering the suitability of nonresidential and public areas and having regard for the most beneficial land use in such areas.

(3) To provide for adequate light, air, and privacy; to secure safety from fire, flood, and other dangers; and to prevent overcrowding of the land and undue congestion of population.

(4) To enhance the character and economic stability and encourage the orderly, beneficial development of the jurisdictional area.

(5) To conserve the value of land, buildings, and improvements throughout the jurisdictional area and to minimize detrimental conflicts among the uses of land and structures.

(6) To guide public and private policy and action providing for transportation, water, sewerage, schools, recreational areas, and other public requirements and facilities.

(7) To provide for the most beneficial relationship between the uses of land and buildings and the efficient traffic movement throughout the jurisdictional area.

(8) To establish reasonable standards of design and procedures for subdivisions and resubdivisions; to further the orderly layout and use of land; and to insure proper legal descriptions and proper monumenting of land.

(9) To insure that public facilities are available and will have a sufficient capacity to serve the proposed subdivision.

(10) To prevent the pollution of air, streams, and ponds; to assure the adequacy of drainage facilities; to safeguard the water table; and to preserve the integrity, stability, beauty, and value of the jurisdictional area.

(11) To preserve the natural beauty and topography of the jurisdictional area, and to insure appropriate development with regard to these natural features.

(12) To provide for open spaces through efficient design and layout of the land, including the use of average density in providing for minimum width and area of lots, while preserving the density of land as established in any zoning ordinance.

(13) To encourage subdivision design which would maximize the conservation of all forms of energy.

(14) To assure that all the most current requirements of the national flood insurance regulations are met**.**

1-105 Interpretation, Conflict, and Severability

1-105.1 Interpretation -- These regulations shall be held to be the minimum requirements for the promotion of health, safety, and general welfare.

1-105.2 Conflict with Public and Private Provisions

1-105.201 Public Provisions -- These regulations are not intended to interfere with, abrogate, or annul any other ordinance, rule, or regulation, statute, or other provisions of law. Where any provision of these regulations imposes restrictions different from those imposed elsewhere within these regulations, or by any other ordinance, rule, regulation, or other provision of law, whichever provisions are more restrictive or impose higher standards shall control.

1-105.202 Private Provisions -- These regulations are not intended to abrogate any easement, covenant, or any other private agreement or restriction; provided, that where these regulations are more restrictive or impose higher standards than such easement, covenant, or other private agreement or restriction, the requirements of these regulations shall govern.

Where any private provision exceeds the standards set forth herein, such shall be considered a private contract between the parties of interest, and as such is beyond the jurisdiction of the Planning Commission.

1-105.3 Severability -- If any part or provision of these regulations or application thereof to any person or circumstances is adjudged invalid by any court of competent jurisdiction, such judgment shall be confined in its operation to the part, provision, or application directly involved in the controversy in which such judgment shall have been rendered and shall not affect or impair the validity of the remainder of these regulations or the application thereof to other persons or circumstances. The Planning Commission hereby declares that it would have enacted the remainder of these regulations without any such part, provision, or application.

1-106 Saving Provision -- These regulations repeal the Subdivision Regulations of Smyrna, Tennessee, adopted April, 1979 as amended, and as such shall not be construed as abating any action pending under, or by virtue of prior subdivision regulations; or as discontinuing, abating, modifying, or altering any penalty accruing or about to accrue; or as affecting the liability of any person; or as waiving any right of the governing body under any section or provision existing at the time of adoption of these regulations; or as locating or annulling any rights obtained by any person by lawful action of the governing body, except as expressly provided otherwise in these regulations.

1-106.1 Previously Approved Subdivisions

1-106.101 Unexpired Preliminary Approval -- The approval granted on any plat prior to the effective date of these regulations shall remain in force and effect for the time period stipulated by the regulations under which the approval was first granted.

1-106-102 Expired Preliminary Approval -- In any instance in which the period of preliminary approval shall have passed with some portion of the subdivision not having received final approval, and the applicant wishes an extension of the preliminary approval, the Planning Commission may:

(1) permit the remaining portion of the subdivision to be constructed and to receive approval under provisions set forth in the regulations whereby preliminary approval was originally granted, or

(2) stipulate that the plat is null and void and that a new plat be presented subject to the provisions of these regulations.

In making this determination, the Planning Commission shall consider all pertinent facts available to it. The current state and active pursuit of construction and development activities within the subdivision shall be given due consideration in the course of the Planning Commission's deliberation on this question.

1-107 Repeal of Previous Regulations -- Upon the adoption and effective date of these regulations, the Subdivision Regulations of Smyrna, Tennessee, are hereby repealed.

1-108 Amendments

1-108.1 Enactment -- For the purpose of providing for the public health, safety, and general welfare the Planning Commission may from time to time amend these regulations. Before the adoption of any amendment to these regulations, a public hearing thereon shall be held by the Planning Commission, as required in Section 13-4-303 within Chapter 4, Title 13, Tennessee Code Annotated.

1-108.2 Codification and Distribution -- Subsequent to the adoption of any amendment to these regulations, such amendment shall be incorporated into the text of these regulations in the following manner:

(1) Replacement pages shall be prepared incorporating the new or changed language as shown in bold type. Each such new or replacement page shall have the amendment number and shall be dated so as to indicate the date of the last revision of the page.

1-109 Enforcement, Violation, and Penalties

1-109.1 General

1-109.101 Authority -- The enforcement of these regulations and the penalties for violations are provided pursuant to Title 13, Tennessee Code Annotated.

1-109.102 Enforcing Officer -- It shall be the duty of the Town Planner (hereinafter referred to as "the enforcing officer") to enforce these regulations and to bring to the attention of legal counsel any violations or lack of compliance herewith.

1-109.103 Recording of Plats -- Pursuant to Section 13-4-302 Tennessee Code Annotated, no plat of a subdivision of land within the jurisdictional area shall be received or recorded by the county register until the plat has received final approval of the Planning Commission in accordance with these regulations, and such approval has been endorsed in writing on the plat by the Planning Commission secretary in the manner prescribed by Section 3-106 of these regulations. The subdivision of any lot or parcel of land by use of metes and bounds description without complying with the plat provisions of these regulations shall not be permitted. All such described subdivisions shall be subject to all of the requirements of these regulations.

1-109.104 Use of Unapproved Plats -- Pursuant to Sections 13-4-306, Tennessee Code Annotated, no owner, or agent of the owner of any land shall transfer, or sell, or agree to sell, or negotiate to sell such land by reference to or exhibition of, or by any other use of a plat of a subdivision of such land without first having submitted a plat of such subdivision to the Planning Commission and obtained its approval as required by these regulations and having recorded such plat in the office of the county register.

1-109.105 Public Ways and Utilities -- Pursuant to Section 13-4-307, Tennessee Code Annotated, the governing body shall not nor shall any public authority accept, lay out, open, improve, grade, pave, or light any public way, lay or authorize the laying of water mains or sewers, or construct or authorize the construction of other facilities or utilities in any public way located within the jurisdictional area unless such way shall have been accepted, opened, or otherwise received the legal status of a public way prior to the attachment of the Planning Commission's jurisdiction, or unless such way corresponds in its location and lines to a way shown on a subdivision plat approved by the Planning Commission or on a public way plat made by the Planning Commission.

However, the governing body may override the Planning Commission by a majority vote of its entire membership as provided in Title 13, Tennessee Code Annotated.

In case of any state highway constructed or to be constructed within the jurisdictional area with state funds as a part of the state highway system, the submission to the Planning Commission shall be by the Tennessee Commissioner of Transportation, who shall have the power to overrule the disapproval of the Planning Commission.

1-109.106 Building Permits -- No building permit shall be issued for the construction of any building or structure located on a lot or plat

subdivided or sold in violation of any provision of these regulations.

1-109.107 Access to Lots by Public Way or Private Easement -- Pursuant to Section 13-4-308, Tennessee Code Annotated, no building permit shall be issued and no building or structure shall be erected on any lot within the jurisdictional area, unless the public way giving access to the lot upon which the building or structure is proposed to be placed shall have been accepted or opened or shall have otherwise received the legal status of a public way as provided by law.

Provided, however that when a permanent easement to a public street is used as access to a lot or tract of land being separated by plat from other property, such easement shall be at least 50 feet in width and shall not be used to provide access to more than one lot or tract of land.

The following standards shall apply to all permanent easements being used to provide access to one lot or tract of land:

(1) easement shall not be legally used by more than two property owners.

(2) no easement shall exceed 700 feet in length.

(3) driveway on easement shall be constructed to minimize erosion or rapid deterioration.

(4) the slope of the easement shall be kept to a maximum ten (10) percent grade and must be able to provide true access to the property.

(5) maintenance of the easement shall be the responsibility of the property owners. the legal documents establishing the easement and ensuring maintenance of the easement shall be submitted with the final plat for review and approval, and shall be recorded with the final plat.

(6) all required utility easements shall be located outside the 50 foot roadway easement.

(7) any further subdividing on the easement shall require the development of a public road and meet all road standards and other requirements as stated in these regulations.

The above section shall not be construed to prohibit the development of buildings on lots or tracts with permanent access provided by private ways when such development is in the form of a planned development project and/or of condominium ownership of such private improvements which have been approved by the Planning Commission and will be in private ownership and control in perpetuity.

1-109.2 Penalties for Violations

1-109.201 Recording of Unapproved Plats -- Any county register receiving, filing, or recording a plat of a subdivision in violation of Section 1-109.103 of these regulations shall be deemed guilty of a misdemeanor, punishable as other misdemeanors as provided by law.

1-109.202 Use of Unapproved Plats -- Any owner or agent of the owner of any land who violates Section 1-109.103 of these regulations shall be deemed guilty of a misdemeanor, punishable as other misdemeanors as provided by law.

1-109.203 False Statements About Roads -- Any owner or agent of the owner of any land who makes false statements about the construction of roads to any prospective purchaser of real estate shall be deemed guilty of a misdemeanor, punishable as other misdemeanors as provided by law, pursuant to Section 13-3-410 of the Tennessee Code Annotated,

1-109.3 Civil Enforcement -- Appropriate actions and proceedings may be taken in equity to prevent any violation of these regulations, to prevent unlawful construction, to recover damages; to restrain, correct, or abate a violation, or to prevent illegal occupancy of a building, structure, or premise; these remedies shall be in addition to the penalties described in Section 1-110 of these regulations.

1-110 SPECIFIC STATUTORY REMEDIES

1-110.1 Use of Unapproved Plats -- The Town, through its attorney or other official designated by the Town Council may enjoin by action of injunction any transfer of, sale of, or agreement to sell any land in violation of these regulations.

1-110.2 Erection of Unlawful Buildings -- Where any building or structure is erected or being erected on any lot in violation of the road or permanent easement frontage requirements of these regulations, the enforcing officer or town attorney, or other official designated by the Town Council, may bring action to enjoin such erection, or cause the building or structure to be vacated or removed.

1-110.3 Enforcement of Financial Surety-- Where a surety instrument is accepted in lieu of completion of subdivision improvements and utilities as provided in these regulations, the Town may enforce such bond in the manner prescribed by Article 7 of these regulations, utilizing all appropriate legal and equitable remedies.

ARTICLE 2

DEFINITIONS

2-101 Usage

(1) For the purpose of these regulations certain numbers, abbreviations, terms, and words used herein shall be used, interpreted, and defined as set forth in this article.

(2) Unless the context clearly indicates to the contrary, words used in the present tense include the future tense and words used in the plural include the singular; the word "herein" means "in these regulations"; and the word "regulations" means "these regulations".

(3) A "person" includes a corporation, a partnership, and an unincorporated association of persons, such as a club; "shall" is always mandatory; a "building" or "structure" includes any part thereof; "used" or "occupied", as applied to any land or building, shall be construed to include "intended, arranged, or designed to be used or occupied".

2-102 Words and Terms Defined

Addenda -- Written or graphic instruments issued prior to the execution of the Agreement which modify or interpret the contract documents, drawings, and specifications, by additions, deletions, clarification's or corrections.

Alley -- A public or private right-of-way primarily designed to serve as secondary access to the side or rear of those properties whose principal frontage is on some other street.

Applicant -- The owner of land proposed to be subdivided or his authorized representative. Consent shall be required from the legal owner of the property.

Architect -- An architect certified and registered by the State Board of Architectural and Engineer Examiners pursuant to Section 62-2-201 et seq, Tennessee Code Annotated, to practice in Tennessee; or a landscape architect certified and licensed by the State Board of Landscape Architects pursuant to Section 62-2-201 et seq, Tennessee Code Annotated, to practice in Tennessee.

Arterial Street or Road -- A major public way defined as an arterial street or road on the Major Thoroughfare Plan.

Block -- A tract of land bounded by public ways or by public parks, cemeteries, railroad rights-of-way, or shorelines or waterways or a combination of such.

Bond -- A type of surety or collateral including cash escrow or a letter of credit from a bank in Rutherford or Davidson County, Tennessee posted with the Town that guarantees specific performance.

Builder's Permit Bond -- A bond required of builders, contractors, or subcontractors, as appropriate, to cover any damage to required improvements resulting from construction activities.

Building -- Any structure built for the support shelter, or enclosure of persons, animals, chattels, or movable property of any kind; the term includes manufactured homes or mobile homes as defined in TCA 68-126-202, but does not include campers, recreational vehicles, semi-tractor trailers, temporary mobile construction offices, or other enclosed trailers.

Building Official -- Person designated by the Town Manager to enforce building codes.

Capital Improvements Program -- A proposed schedule of future projects, listed in order of construction priority, together with cost estimates and the anticipated means of financing each project. All major projects requiring the expenditure of public funds, over and above the annual local government operating expenses, for the purchase, construction, or replacement of the physical assets of the community are included.

Channel - That portion of a watercourse being the stream bed of any blue line stream shown on any U.S.G.S. Quadrangle Map, or any stream bed shown on any official FEMA flood map.

Collector Street or Road -- A major public way defined as a collector street or road in the Major Thoroughfare Plan.

Common Elements -- Any portion of a condominium which is held in common by owners of condominium units. These elements may be either general common elements or limited common elements, as defined below.

General Common Elements -- Any of the common elements of a condominium which are held in joint ownership by all owners of the condominium.

Limited Common Elements -- Any of the common elements of a condominium which are reserved for use by the owner of a particular condominium unit or group of units.

Comprehensive Plan -- A master plan or general plan for the jurisdiction corporate limits of the Town of Smyrna, as well as the urban growth boundary of the Town of Smyrna, which plan includes the Major Thoroughfare Plan and Land Use Plan, and which master plan has been adopted and approved by the Town of Smyrna Planning Commission and the Town Council, said document titled as Town of Smyrna Comprehensive Plan.

Condominium -- A form of ownership of less than the whole of a building or system of buildings under a statute which provides the mechanics and facilities for formal filing and recordation of divided interests in real property, whether the division is vertical or horizontal.

Condominium Subdivision -- The subdivision of property through the establishment of a condominium or horizontal property regime.

Horizontal Condominium Subdivision -- A condominium subdivision where each unit occupies some ground space.

Vertical Condominium Subdivision -- A condominium subdivision of a multi-story building in which one (1) or more units do not occupy ground area.

Condominium Unit -- A space conveyed by separate title and located within a condominium structure.

Construction Plan -- The maps or drawings accompanying a subdivision plat and showing the specific location and design of improvements to be installed in the subdivision in accordance with the requirements of the Planning Commission.

Contractor -- An individual, firm, or corporation that is licensed as a contractor in the State of Tennessee with whom an owner or authorized agent has executed a work agreement.

Cul-de-sac -- A minor street having only one outlet and having an appropriate terminal for the safe and convenient reversal of traffic movement; definition includes dead end, turn-around, or turn-about.

Design Specifications -- Written descriptions of a technical nature of materials, equipment, construction systems, standards, and workmanship required for a project intended for local government ownership or maintenance.

Developer -- The owner or authorized representative of land proposed to be subdivided or his authorized representative. Consent shall be required from the legal owner of the property.

Director of Public Works -- Person appointed by the Town Manager to assure compliance and specifications for roadway and drainage.

Director of Utilities -- Person appointed by the Town Manager designated to assure compliance with applicable standards and specifications for utilities.

Dwelling Unit -- A room, or rooms connected together constituting a separate, independent housekeeping establishment for owner occupancy, rental or lease on a daily, weekly, monthly, or longer basis; physically separated from any other room(s) or dwelling units which maybe in the same structure; and containing independent cooking and sleeping facilities.

Easement -- Authorization by a property owner for the use by another, for a specified purpose, of any designated part of his property. (See Section 1-109.107 for herein for standards pertaining to easements).

Enforcing Officer -- The Town Planner or such person designated by the Town Manger to be responsible for enforcing the provisions of these regulations.

Engineer -- An engineer licensed by the State Board of Architectural and Engineer Examiners pursuant to Section 62-2-201, Tennessee Code Annotated, to practice in Tennessee.

Equal Degree of Encroachment -- The delineation of floodway limits so that floodplain lands on both sides of a stream are capable to conveying a proportionate

share of 100-year flood flows. This is determined by considering the hydraulic conveyance of the floodplain along both sides of a stream for a significant reach.

Escrow -- A fiduciary agreement with the local government in lieu of actual performance and intended to assure performance. An escrow account may be provided as a bond subject to agreement of the governing body.

External Subdivision Boundary -- All points along the periphery of a subdivision.

Final Subdivision Plat -- The final map or drawing and accompanying materials, described in these regulations, on which the subdivider's plan of the subdivision is presented to the Planning Commission for approval and which, if approved by the commission, is recorded with the county register of deeds.

"Flood" or "Flooding" -- A general and temporary condition of partial or complete inundation of normally dry land areas from:

1. The overflow of inland or tidal waters;
2. The unusual and rapid accumulation or runoff of surface waters from any source.

Flood Frequency -- The statistically determined average for how often a specific flood level or discharge may be equaled or exceeded.

Flood Fringe Area -- That area of the floodplain lying outside the floodway but still lying within the area of special flood hazard, i.e., within the 100-year floodplain.

Flood Hazard Boundary Map (FHBM) -- An official map of a community, issued by the Federal Emergency Management Agency, where the boundaries of areas of special flood hazard have been designated as Zone A.

Floodplain or Flood-Prone Area -- Any land area susceptible to being inundated by water from any source (See “Flooding”).

Floodplain Management Program -- The overall program of corrective and preventive measures for reducing flood damage, including but not limited to emergency preparedness plans, flood control works, and floodplain management regulations.

Flood Profile -- A graph showing the water-surface elevation or height or a particular flood event for any point along the longitudinal course of a stream. The flood profile is determined through the use of standard open-channel hydraulic calculations.

Flood Proofing -- Any combination of structural and nonstructural additions, changes, or adjustments to structures which reduce or eliminate flood damage to real estate or improved real property, water and sanitary facilities, structures and their contents.

Floodway -- The channel or a river or other watercourse and the adjacent land areas that must be reserved in order to discharge the base flood without cumulatively increasing the water surface elevation more than a designated height.

Floodway Encroachment Limits -- The lines marking the limits of floodways on official federal, state, and local floodplain maps.

Floodway Fringe - The area adjoining a watercourse which, although not lying within a floodway, has been or may hereafter be covered by a 100-year flood.

Frontage -- That side of a lot abutting a public way ordinarily regarded as the front of the lot. It shall not be considered as the ordinary side of a corner lot.

Governmental Agency -- Any public body other than the governing body.

Governing Body -- The Town Council of the Town of Smyrna.

Governmental Representative -- An outside person or designated local official or employee authorized to act on behalf of the governing body in making determinations regarding legal, public works, planning, community development, or other public business.

Grade -- The slope of a public way specified in percentage terms.

Highway, Limited Access -- A freeway or expressway providing a traffic way for through traffic, in respect to which owners or occupants of abutting property(s) or lands and other persons have no legal right of access to or from the traffic way, except as such points and in such manner as may be determined by the public authority having jurisdiction over such traffic way.

Horizontal Property Act -- "The Tennessee Horizontal Property Act" as codified in Sections 64-2701 through 66-27-101 et seq., Tennessee Code Annotated.

Individual Sewage Disposal System -- A septic tank, seepage tile sewage disposal system, or any other sewage treatment device other than a public treatment system approved by the appropriate governmental representative.

Internal Subdivision Boundary -- All points within a subdivision which do not constitute external boundaries.

Joint Ownership -- Joint ownership among persons shall be construed as the same owner for the purpose of imposing subdivision regulations.

Jurisdictional Area -- Planning boundary(s) established in keeping with Sections 13-4-103, 13-4-201, and 13-4-303, Tennessee Code Annotated.

Land Surveyor -- A land surveyor certified and registered by the State Board of Land Survey Examiners pursuant to Section 62-18-103, Tennessee Code Annotated, to practice in Tennessee.

Land Use Plan -- An element of the master or comprehensive plan which sets out a plan or scheme of future land usage, which is the Town of Smyrna Land Use Plan.

Letter of Credit – A written guarantee from a financial institution guaranteeing the performance of the terms and conditions of a development approval.[1]

Lot -- A tract, plot, or portion of a subdivision or parcel of land intended as a unit for the purpose, whether immediate or future, or transfer of ownership, or for building development.

Lot, Corner -- A lot situated at the intersection of two (2) public ways.

Lot Improvements -- Any building, structure, place, work of art, or other object or improvement of the land on which they are situated constituting a physical betterment of real property, or any part of such betterment.

Low-Lying Land - Any sink hole or depression at a lower elevation than the elevation of the drainage basin or 100 year floodplain.

Major Street or Road -- A public way which is classified as a collector or arterial public way in the Major Thoroughfare Plan.

Major Throroughfare Plan -- The plan adopted by the Planning Commission, pursuant to Section 13-4-302, Tennessee Code Annotated, and the Town Council showing, among other things, "the general location, character, and extent of public ways... (and) the removal, relocation, extension, widening, narrowing, vacating, abandonment or change of use of existing public ways...", which is the Town of Smyrna Major Thoroughfare Plan, included in the Town of Smyrna Comprehensive Plan.

Major Subdivision -- All subdivisions not classified as minor subdivisions including but not limited to subdivisions of five or more lots or subdivisions of any size requiring any new or improved road, the extension of government facilities, or the creation of any public improvements, or containing any floodprone area.

Minor Street or Road -- A public way which is not classified as an arterial or collector on the adopted Major Thoroughfare Plan.

Minor Subdivision -- Any subdivision containing either less than three (3) lots, or less than five (5) lots fronting on an existing public way; not involving any new or improved public way, the extension of public facilities, or the creation of any public improvements, and not in conflict with any provision of the adopted general plan, major street or road plan, and/or zoning ordinance, or these regulations.

National Flood Insurance Program -- A program established by the U.S. Government in the National Flood Insurance Act of 1968, and expanded in the Flood Disaster Protection Act of 1973, in order to provide flood insurance at rates made affordable through a federal subsidy in local political jurisdictions which adopt and enforce floodplain management programs meeting the requirements of the National Flood Insurance Program regulations. The program regulations are found at 44 Code of Federal Regulations, Chapter 1, Subchapter B.

Neighborhood Collector Street or Road – A public way which is not classified as an arterial or collector on the adopted Major Thoroughfare Plan but meets the criteria as established by these regulations.

Off-Site -- Any premise not located within the area of the property to be subdivided, whether or not in the same ownership of the applicant for subdivision approval.

One Hundred-Year Flood -- The flood having a one percent chance of being equaled or exceeded in any given year; also referred to as base flood.

Owner -- Any person, group of persons, firm or firms, corporation or corporations, or any other legal entity having legal title to or sufficient proprietary interest in the real property.

Performance Bond -- See "Bond".

Perimeter Street -- Any existing street to which the parcel of land to be subdivided abuts on only one side.

Planning Commission -- The Town of Smyrna Municipal Planning Commission as established pursuant to Title 13, Chapter 4, Tennessee Code Annotated, to execute a partial or full planning program within authorized area limits.

Preliminary Plat -- The preliminary drawing or drawings, described in these regulations, indicating the proposed manner of layout of the subdivision to be submitted to the Planning Commission for approval.

Premise(s) -- A tract of land together with any buildings or structures which may be thereon.

Public Improvement -- Any drainage ditch, roadway, parkway, sidewalk, pedestrian way, tree, lawn, off-street parking area, lot improvement, or other facility for which the local government may ultimately assume the responsibility for maintenance and operation or which may affect an improvement for which government responsibility is established.

Public Way -- Any publicly owned street, alley, sidewalk, or land right-of-way which provides for movement of pedestrians or vehicles.

Reach -- A hydraulic engineering term to describe longitudinal segments of a stream or river. A reach generally include the segment of the flood hazard area where flood heights are influenced by man-made area where flood or natural obstructions. In an urban area, the segment of a stream or river between two consecutive bridge crossings typically would constitute a reach.

Regulatory Flood -- The one hundred-year flood.

Regulatory Flood Protection Elevation -- The elevation of the regulatory flood plus one foot of freeboard to provide a safety factor.

Resubdivision -- A change in a map of any approved or recorded subdivision plat which alters the number of lots incorporated within the confines of the original plat, the street layout on such map or plat any area use thereon dedicated or reserved for public use, any lot line, or any required servicing public facility.

Right-of-Way -- A strip of land occupied or intended to be occupied by a public way crosswalk, railroad, electric transmission line, oil or gas pipeline, water main, sanitary or storm sewer line, or for another special use. The usage of the term "right-of-way", for land platting purposes, shall mean that every right-of-way hereafter established and shown on a final plat is to be separate and distinct from the lots or parcels adjoining such right-of-way and shall not be included within the dimensions or areas of such lots or parcels.

Sale or Lease -- Any immediate or future transfer of ownership, including contract of sale or transfer, of an interest in a subdivision or part thereof, whether by metes and bounds, deed, contract, plat, map, or other written instrument.

Same Ownership -- Ownership by the same person, corporation, firm, entity, partnership, or unincorporated association or ownership by different corporations, firms, partnerships, entities, or unincorporated associations, in which a stockholder, partner, associate, or a member of his family owns an interest in each corporation, firm, partnership, entity, or unincorporated association.

Setback -- The distance between a building wall and the nearest public way right-of-way.

Sketch Plat -- A sketch preparatory to the preliminary plat.

Special Flood Hazard Map -- The official map designated by the Federal Insurance Administrator to identify floodplain areas having special flood hazards.

Start of Construction -- For purposes of subdivision control any alteration of the original surface area of the land, from and after the date of adoption of these regulations.

Structure -- Anything constructed above or below ground.

Subdivider -- Any person who (1) having an interest in land, causes it, directly or indirectly, to be divided into a subdivision or who (2) directly or indirectly, sells, leases, or develops, or offers to sell, lease, or develop, or advertises for sale, lease, or development, any interest, lot parcel site, unit, or plot in a subdivision or who (3) engages, directly or indirectly, or through an agent in the business of selling, leasing, developing, or offering for sale, lease, or development a subdivision or any interest, lot parcel site, unit, or plot in a subdivision or who (4) is directly or indirectly controlled by or under direct or indirect common control with any of the foregoing.

Subdivision - The division of a tract or parcel of land into two (2) or more lots, sites, or other divisions requiring new street or utility construction, or any division of less than five (5) acres, for the purpose, whether immediate or future, of sale or building development, and includes resubdivision and when appropriate to the context, relates to the process of resubdividing or to the land or area subdivided. (See Section 13-4-301, Tennessee Code Annotated).

Subdivision Agent -- Any person who represents or acts for or on behalf of a subdivider or developer in selling, leasing, or developing or offering to sell, lease, or develop any interest, lot, parcel, unit, site, or plot in a subdivision, except in an instance where only legal counsel is provided.

Substantial Improvement -- Any repair, reconstruction, or improvement of a structure, the cost of which equals or exceeds fifty (50) percent of the actual cash value of the structure either before the improvement is begun or, if the structure has been damaged and is being restored, before the damage occurred. Substantial improvement begins when the first alteration of any structural part of the building commences.

Temporary Improvement -- Any improvement built and maintained by a subdivider during construction of the subdivision and prior to release of the surety for completion of required improvements.

Town -- Town of Smyrna, Tennessee.

Town Attorney -- The attorney holding the position of attorney for the town or such licensed attorney designated by the town attorney to furnish legal assistance for the administration of these regulations.

Town Engineer -- The Town Engineer of the Town or such professional engineer as may be appointed by the Town Council or Town Manager, as appropriate, to work on behalf of the Town.

Town Planner -- Person designated by the Town Manager designated to enforce zoning ordinances.

Twenty-Five Year Flood -- A flood having an average frequency of occurrence of once in 25 years.

Watercourse - Any stream shown on an official FEMA flood management map or any blue line stream shown on any U.S.G.S. quadrangle map or as determined by the Tennessee Department of Environment and Conservation.

Water Surface Elevation -- The height, in relation to the National Geodetic Vertical Datum (NGVD) of 1929, (or other datum, where specified) of floods of various magnitudes and frequencies in the floodplains of riverine areas.

Water Quality Buffer Zone – A strip of undisturbed native (indigenous) vegetation, either original or re-established, that borders streams and rivers, ponds and lakes, wetlands, and seeps; also known as a riparian zone.

Zoning Ordinance -- The Town of Smyrna Municipal Zoning Ordinance as adopted and as amended from time to time pursuant to Title 13, Chapters 7, Tennessee Code Annotated, for the purpose of regulating by district, land development or use for a designated area.

ARTICLE 3

PROCEDURES FOR PLAT APPROVAL

3-101 Conditions[2] -- Regulation of the subdivision of land and the attachment of reasonable conditions to land subdivision are exercises of valid police power delegated by the state to the Planning Commission. The developer has the duty of compliance with reasonable conditions imposed by the Planning Commission for design, dedication, improvement, and restrictive use of the land so as to provide for the physical and economical development of the jurisdictional area and for the safety and general welfare of future plot owners in the subdivision and of the community at large.

3-102 General Procedure

3-102.1 Plat Approval Requirements -- Before any contract is executed for the sale of any portion of a parcel of land which is proposed to be subdivided and before any permit for the erection of any structure in a proposed subdivision shall be granted, the subdividing owner or his authorized agent shall apply for and secure the Planning Commission's approval of the proposed subdivision in accordance with the procedures of this article.

3-102.2 Classification of Subdivisions -- The Planning Commission shall classify each subdivision proposal as either major or minor as defined herein.

3-102.201 Review Procedure -- The subdivider shall follow the procedure described below in order to secure plat approval

(1) Minor Subdivisions (See definition in Article 2)

(a) Pre-application conference with the enforcing officer including submittal of a scale drawing or survey of the proposed subdivision for preliminary discussion and review.

(b) Submittal of a final plat, either for review by the local planning staff, or the Planning Commission, as per the type of minor subdivision involved as defined in Article 2, prepared in accordance with the specifications in Section 4-104 herein.

(2) Major Subdivision (See definition in Article 2)[3]

(a) Pre-application conference on the subdivision with Town staff generally including a sketch plat, and discussion of the proposed area to be subdivided.

(b) Submittal of a sketch plat, prepared in accordance with Section 4-101 herein, for Planning Commission approval.

(c) Submittal of the preliminary plat, prepared in accordance with Section 4-102 and Section 4-103 herein, for Planning Commission approval.

(d) Securing of approval from other public agencies.

(e) Submittal of construction plans, prepared in accordance with Section 4-103 herein, for approval by the Director of Public Works and the Director of Utilities.

(f) Submittal of the final subdivision plat, prepared in accordance with Section 4-104 herein, for Planning Commission approval.

3-102.3 Official Submission Date -- For the purpose of these regulations, for both major and minor subdivisions, the date of the regular meeting of the Planning Commission at which the hearing on the final subdivision plat, including any adjourned date thereof, is closed, shall constitute the official submittal date of the plat at which the statutory period required in Section 13-4-304, Tennessee Code Annotated, for formal approval or disapproval of the plat shall commence.

3-102.4 Policy on Flood-prone Areas -- In determining the appropriateness of land subdivision at any site containing a flood-prone area, the Planning Commission, in reviewing any plat, shall consider the policy and purpose set forth in Section 1-104 of these regulations and, additionally:

(1) the danger to life and property due to the increased flood heights or velocities, either potential or actual, caused by subdivision fill, roads, and intended uses;

(2) the danger that intended uses or improvements may be swept onto other lands or downstream to the injury of others;

(3) the adequacy of proposed water supply, sanitation, and drainage systems, and the ability of these systems to function under flood conditions;

(4) the susceptibility of the proposed facility and its contents to flood damage and the effect of such damage upon the individual owner;

(5) the importance of the services provided by the proposed facility to the community at large;

(6) the requirements of the subdivision for a waterfront location;

(7) the availability of alternative locations not subject to flooding for the proposed subdivision and land uses;

(8) the compatibility of the proposed uses with existing development or development anticipated in the foreseeable future;

(9) the relationship of the proposed subdivision to the land development plan and the floodplain management program for the area;

(10) the safety of access to the property for emergency vehicles in times of flood;

(11) the expected heights, duration, velocity, rate of rise, and sediment transport of the floodwaters expected at the site;

(12) the costs of providing governmental services during and after flood conditions, including maintenance and repair of public utilities and facilities such as sewer, gas, electrical, and water systems, public ways, and bridges; and

(13) the effect of the proposed subdivision upon the governing body's participation in the National Flood Insurance Program, if such governing body is, or elects to be, in the program.

(14) any grading in the flood plain area shall be utilizing on site material to off set fill and cut areas.

No subdivision or part thereof shall be approved by the Planning Commission if proposed subdivision levees, fills, structures, or other features will individually or collectively, increase flood flows, heights, duration, or damages. The regulatory limits (the one hundred-year flood level) shall be determined from the latest approved flood study for the jurisdictional area, and any subsequent revisions thereto. Specific engineering studies are to be formulated by the developer in those areas in which flood data are not currently available, if deemed necessary by the Planning Commission.

In any instance in which the Planning Commission determines that a proposed subdivision may affect the flood height, velocity, or duration in any flood-prone area outside its jurisdiction, the commission shall take all actions necessary and proper to ensure the coordinated review of the development with the appropriate governmental agencies of the affected area.

In approving plans for subdivision of land containing flood-prone areas, the Planning Commission shall ensure that development will proceed in such a way that property lying within any floodway, as defined by these regulations, will be maintained in a manner as prescribed by the Town of Smyrna Municipal Zoning Ordinance. The Planning Commission shall also ensure that development within any floodway fringe area (within the one hundred-year flood area) will be protected adequately against potential flood hazards by the methods prescribed in Article 5 of these regulations.[4]

The Planning Commission shall disapprove the subdivision of any land containing a flood-prone area when the commission determines that subdivision plans are not consistent with the policy stated in this section.

3-102.5 Special Provisions Governing Unit Ownership (Condominium) Subdivisions

3-102.501 General Provisions

A. Intent -- This section is intended to augment the general legislation of Sections 66-27-101 through 66-27-123, Tennessee Code Annotated, entitled "Horizontal Property Act," by providing supplemental rules and regulations for the implementation of the act, as specifically authorized in Sections 66-27-121, Tennessee Code Annotated.

B. Applicability -- Whenever a developer, the sole owner, or the co-owners of a building or buildings expressly declare through the submission of a master deed, lease, or plat their desire to submit their property to a regime, as established and provided by Sections 66-27-101 through 66-27-123, Tennessee Code Annotated, wherein there is established a horizontal property regime, each such condominium horizontal property regime created under the authority of these provisions for the purpose of sale or transfer of real property is subject to the provisions of these regulations.

3-102.502 Submission of Plat Required -- Prior to the sale or transfer of any property incorporated in the property regime, the developer, sole owner, or co-owners of such property shall submit to the Planning Commission a subdivision plat of such property in the manner prescribed by this article; such plat, if approved, shall be filed with the county register in the manner prescribed by this article.

3-102.503 Determination of Subdivision Type -- Condominium subdivisions shall be classified by the Planning Commission during the plat review process as either horizontal condominiums or vertical condominiums as defined in Article 2 of these regulations.

3-102.504 Procedure -- An applicant seeking approval of a condominium subdivision shall proceed through the normal procedure for subdivision approval, as set forth in this article.

3-102.505 Contents of Plans and Documents -- The plats, plans, and documents submitted by an applicant seeking approval of condominium subdivision shall conform to the specifications set forth in Article 4 of these regulations.

3-103 Sketch Plat[5]

3-103.1 Purpose of Sketch Plat -- The sketch plat is to be a concept plan for design purposes and should be used to discover all factors which may have an impact on the proposed development and to advise the subdivider of various possibilities before substantial amounts of time and money have been invested in a very detailed proposal which may contain elements contrary to these regulations.

3-103.2 Application Procedure and Requirements – The applicant shall file with the Planning Commission a sketch plat. The failure of the applicant to satisfy the requirements of this section with full and correct information shall be cause for disapproval of the sketch plat. The sketch plat shall include the information set forth in Section 4-101and:

(1) be presented at the office of the Town Planner;

(2) include all land which the applicant proposes to be subdivided and all land immediately adjacent, extending one hundred (100) feet there from, or of that directly opposite thereto, extending one hundred (100) feet from the public way frontage of such opposite land. The lot pattern of surrounding development shall be shown within that area located within one hundred (100) feet of the proposed development;

(3) be accompanied by a minimum of ten (10) copies of the sketch plat as described herein;

(4) be presented to the Town Planner for the Planning Commission at least seventeen (17) days prior to a regular (officially opened) meeting of the Planning Commission. The Town Planner shall place the sketch plat on the agenda for the Planning Commission within 30 days of submittal by the applicant or at the next regular meeting of the Planning Commission after the 30 day period. The applicant may waive the time frame requirement for the appearance of the plat on the agenda;

(5) be accompanied by an administrative review fee as set by the Town Council.

3-103.3 Sketch Approval – After the Planning Commission has reviewed the sketch plat, exhibits, and the results of administrative review, the applicant shall be advised of any required changes. The Planning Commission shall approve, conditionally approve, or disapprove the sketch plat within sixty (60) days after the date of the regular meeting of the Planning Commission at which the hearing on sketch approval, including adjourned date thereof, is closed. The applicant, however, may agree to an extension of the time for Planning Commission review.

3-103.4 Approval of Sketch Plat -- Approval of the plat shall constitute authorization to prepare detailed plans and specifications.

3-103.5 Expiration of Approval -- The approval of the sketch plat shall expire if no preliminary plat and construction plans are submitted and approved by the Planning Commission within one year of the date of the sketch plat approval.

3-104 Preliminary Plat and Construction Plans (Major Subdivisions Only)

3-104.1 Application Procedure and Requirements[6] -- The applicant shall file with the Planning Commission a preliminary plat. The failure of the applicant to satisfy the requirements of this section with full and correct information

shall be cause for disapproval of a preliminary plat. The preliminary plat shall be prepared in accordance with Section 4-102 and:

(1) be presented at the office of the Town Planner;

(2) include all land which the applicant proposes to be subdivided and all land immediately adjacent, extending one hundred (100) feet therefrom, or of that directly opposite thereto, extending one hundred (100) feet from the public way frontage of such opposite land. The lot pattern of surrounding development shall be shown within that area located within one hundred (100) feet of the proposed development;

(3) be accompanied by a minimum of ten (10) copies of the preliminary plat as described herein;

(4) be presented to the Town Planner for the Planning Commission at least seventeen (17) days prior to a regular (officially opened) meeting of the Planning Commission. The Town Planner shall place the preliminary plat on the agenda for the Planning Commission within 30 days of submittal by the applicant or at the next regular meeting of the Planning Commission after the 30 day period. The applicant may waive the time frame requirement for the appearance of the plat on the agenda;

(5) be accompanied by an administrative review fee as set by the Town Council.

3-104.2 Administrative Review -- An administrative review meeting shall be conducted on the preliminary plat, construction plans, and any exhibits submitted in conformance with these regulations. This review shall include the technical review staff to the Planning Commission. The review shall be held prior to the regularly scheduled Planning Commission meeting at which the plat is to be reviewed. The findings of the review committee shall be presented to the Planning Commission.

With expert assistance, as necessary, the subdivider shall prepare a report, on any proposed subdivision containing or abutting a flood-prone area. In all cases, wherein a portion of a subdivision encroaches in an unmapped watercourse, a drainage easement shall be reserved on both sides of such channel extending five (5) times the width of said channel, unless a flood report as specified herein is approved by the Planning Commission requiring a lesser easement. Such report shall estimate the discharge of the regulatory flood; determine the specific flooding threat at the site of the proposed subdivisions; and indicate whether the subdivision is located in a floodway or floodway fringe area by:

(1) calculation of water surface elevations and regulatory flood protections based upon a hydraulic analysis of the capacity of the stream channel and overbank areas to convey the regulatory flood;

(2) computation of the floodway required to convey the regulatory flood without increasing natural flood heights of the regulatory flood more than one foot at any point; and

(3) unless otherwise established, computation of increases in flood heights caused by any encroachment shall be based upon the reasonable assumption that there will be an equal degree of encroachment on both sides of the stream within that reach. No increase in flood storage attributable to encroachments on the floodplain of any river or stream shall be permitted in any one reach or for the cumulative effect of several reaches.

3-104.3 Notice of Hearing -- The Planning Commission shall hold a hearing as required by Chapter 4 of Title 13, Tennessee Code Annotated, on each plat brought before it.

3-104.4 Preliminary Approval[7] -- After the Planning Commission has reviewed the preliminary plat, exhibits, and the results of administrative review, the applicant shall be advised of any required changes. The Planning Commission shall approve, conditionally approve, or disapprove the preliminary plat within sixty (60) days after the date of the regular meeting of the Planning Commission at which the hearing on preliminary approval, including adjourned date thereof, is closed. The applicant, however, may agree to an extension of the time for Planning Commission review.

A certificate of preliminary approval shall be issued by the secretary of the Planning Commission, upon demand, and the applicant may proceed to apply for final subdivision plat approval in the manner prescribed by Section 3-105 of these regulations after approval of the construction plans by the Director of Public Works and Director of Utilities.

After the Planning Commission approves, conditionally approves, or disapproves the preliminary plat, one copy of the proposed preliminary plat shall be returned to the developer with the date of approval, conditional approval, or disapproval thereon. If a preliminary plat is disapproved the Planning Commission shall state specific reasons for disapproval which shall be entered into the minutes of the meeting.

Before the Planning Commission approves a preliminary plat showing land for any public use, the Planning Commission shall obtain approval for the land reservation from the governing body or appropriate governmental agency.

3-104.5 Effective Period of Preliminary Approval[8] -- The approval of a preliminary plat shall be effective for a period of twelve (12) months, at the end of which time final approval of the subdivision plat must have been obtained from the Planning Commission, although the plat need not have been signed and filed with the county register. Any plat not receiving final approval within the period of time set forth herein shall be null and void, and the developer shall be required to submit a new plat for preliminary approval subject to the Town of Smyrna Municipal Zoning Ordinance and the subdivision regulations currently in effect.

3-104.6 Zoning Regulations[9] -- Every plat shall conform to the Town of Smyrna Municipal Zoning Ordinance and subdivision regulations applicable at the time of proposed final approval, except that any plat which has received preliminary approval shall be exempt from any subsequent amendments to such zoning ordinance or these regulations rendering the plat nonconforming as to bulk, use, or development standards, provided, that final approval is obtained within the effective period of preliminary approval set forth in Section 3-104.5, herein.

3-105 Final Subdivision Plat (Minor and Major Subdivisions)

3-105.1 Application Procedure and Requirements[10] -- A subdivider shall file with the Planning Commission a final plat. The plat shall be prepared in accordance with Section 4-104 and:

(1) include the entire subdivision, or section thereof, for which final approval is sought;

(2) be accompanied by a minimum of ten (10) copies of the final subdivision plat as described herein;

(3) comply substantially with the preliminary plat, where such plat is required;

(4) be presented to the Town Planner for the Planning Commission at least seventeen (17) days prior to the regular meeting of the commission at which it is to be considered. The Town Planner shall place the final plat on the agenda for the Planning Commission within 30 days of submittal by the applicant or at the next regular meeting of the Planning Commission after the 30 day period. The applicant may waive the time frame requirement for the appearance of the plat on the agenda;

(5) be accompanied by formal irrevocable offers of dedication to the public of all public ways and uses, utilities, parks, and easements, in a form approved by legal counsel, as applicable. (The subdivision plat shall be marked with a notation indicating the formal offers of dedication as shown in Article 4 of these regulations.);

(6) be accompanied, if the final plat contains open space, or recreational facilities, or if any portion of the site is in common ownership, by the following documentation for approval by the Planning Commission:

(a) plans for improvement and maintenance of the open space or facilities located thereon;

(b) articles of incorporation and bylaws of the co-owners association or other legal entity (where open space or facilities are to be deeded to a co-owners association or similar organization acting on behalf of the joint owners of said property) charged with improving or maintaining the open space or facilities, and declaration of covenants and

restrictions pertaining to each and every property within the subdivisions; and

(c) declaration of covenants and restrictions pertaining to open space and facilities which assure the continued use of said facilities for the purpose intended, where open space or facilities are to be retained by the developer.

(d) that any open-space that is being dedicated for public utilization comply with the requirements of 3-105.1(5) herein, as well as the submittal of documentation from the appropriate Town department or agency that the dedicated property and/or facilities are desirable for acceptance and maintenance. The Planning Commission shall make a recommendation to the governing body that the open-space and/or facilities be subsequently accepted.

(7) be accompanied by an administrative review fee as set by the Town Council.

3-105.2 Endorsement of Notations -- The notations and certifications required by Section 4-104.3, of these regulations to appear upon the final plat shall be endorsed by appropriate officials and other persons prior to application for final subdivision plat approval, except that the certificate of Planning Commission approval shall be signed at the time specified in Section 3-106 of these regulations.

3-105.3 Notice of Hearing -- The Planning Commission shall hold a hearing as required by Chapter 4 of Title 13, Tennessee Code Annotated, on each plat brought before it.

3-105.4 Final Approval -- After the Planning Commission has reviewed the final plat, exhibits, and the results of administrative review, the applicant shall be advised of any required changes. The Planning Commission shall approve, conditionally approve, or disapprove the final plat within sixty (60) days after the date of the regular meeting of the Planning Commission at which the hearing on final approval, including adjourned date thereof, is closed. The applicant, however, may agree to an extension of the time for Planning Commission review.

A certificate of final approval shall be issued by the secretary of the Planning Commission, upon demand. After the Planning Commission approves, conditionally approves, or disapproves the final plat, one copy of the proposed final plat shall be returned to the developer with the date of approval, conditional approval, or disapproval thereon. If a final plat is disapproved the Planning Commission shall state specific reasons for disapproval which shall be entered into the minutes of the meeting.

Before the Planning Commission approves a final plat showing land for any public use, the Planning Commission shall obtain approval for the land reservation from the governing body or appropriate governmental agency.

3-105.5 Vested Rights -- No vested rights shall accrue to any plat by reason of preliminary or final approval until the actual signing of the plat by the secretary of the Planning Commission. All requirements, conditions, or regulations adopted by the Planning Commission, applicable to the particular subdivision or to all subdivisions generally, shall be deemed a condition of approval for any subdivision prior to the time of the signing of the final plat by the secretary of the Planning Commission. Where the Planning Commission has required the installation of improvements prior to the signing of the final plat, the Planning Commission shall not modify unreasonably the conditions set forth in the resolution of final approval.

3-105.6 Effective Period of Final Approval -- The approval of a final plat shall be effective for a period of twenty-four (24) months. At the end of twenty-four (24) months, the plat must either be signed by the Secretary of the Planning Commission and filed with the county register and/or a development agreement executed with the Town for the approved plat. If neither has been done, the final plat shall expire and become null and void, and the developer shall be required to submit a new plat for approval subject to the Town of Smyrna Municipal Zoning Ordinance and the subdivision regulations currently in effect.

3-105.7 Beginning of Construction -- No construction of the required public improvements shall begin on the subdivision until after approval of the final plat has been obtained from the Planning Commission, in addition to all other requirements of these regulations and all other appropriate Town, State, or federal laws and ordinances having been met. This provision shall not preclude a developer from obtaining a grading permit for the project provided all other applicable laws and ordinances are met.

3-106 Signing and Recording of Subdivision Plat[11]

3-106.1 Signing of Plat

(1) When a letter of credit is required, the secretary of the Planning Commission shall endorse approval on the plat after the letter of credit has been submitted and after all the conditions of the resolution pertaining to the plat have been satisfied.

(2) When installation of improvements is required, the secretary of the Planning Commission shall endorse approval on the plat after all conditions of the resolution have been satisfied and all improvements satisfactorily completed. There shall be written evidence that the required public facilities have been installed in a manner satisfactory to the governing body as shown on certifications by the Director of Public Works, Town Engineer, and the Director of Utilities that necessary land dedications and improvements have been accomplished. To this effect, the owner/developer shall submit to the Town of Smyrna an "as-built" set of plans for any facility improvements approved under these regulations, prior to the issuance of said certifications.

(3) When the conditions of this section are satisfied, the secretary shall sign the permanent reproducible original of the final plat.

3-106.2 Recording of Plat -- It shall be the responsibility of the subdivider to file the plat with the county register's office. Simultaneously, with the filing of the plat, the subdivider shall record the agreement of dedication together with such legal documents as shall be required to be recorded by legal counsel. The project applicant or subdivider shall pay all costs associated with the recordation of his or her respective final plat(s).

3-106.3 Sectionalizing Major Subdivision Plats -- Prior to granting final approval of a major subdivision plat, the Planning Commission may permit the plat to be divided into two (2) or more sections and may impose such conditions upon the filing of each section as it may deem necessary to assure the orderly development of the subdivision. Nevertheless, all approved final plats and sections thereof must comply with the requirements of Section 3-106.2 herein.

The Planning Commission may require that a letter of credit be in such amount as is commensurate with the section or sections of the plat to be filed and may defer the remaining required performance bond principal amount until the remaining sections of the plat are offered for filing. The developer also may file irrevocable offers to dedicate public ways and improvements in the section offered to be filed and defer filing offers of dedication for the remaining sections until such sections, subject to any conditions imposed by the Planning Commission, shall be granted concurrently with final approval of the plat. Such authorized sections must contain at least ten (10) percent of the total number of lots contained in the proposed plat unless a specific waiver of this requirement is granted by the Planning Commission.

3-107 Development Agreement[12]

3-107.1 After approval of the preliminary plat by the Planning Commission and the construction plans by the Town Engineer, Director of Public Works, Director of Utilities, and any other required agency, a development agreement may be entered into between the subdivider and the Town. This agreement is required prior to the commencement of any development activity. This is required pursuant to the Town of Smyrna Municipal Code Title 14, Chapter 8.

3-108 Resubdivision of Land

3-108.1 Procedures for Resubdivision -- If any change in an approved or recorded subdivision plat would affect the layout of any public street, alley, or road (hereinafter referred to as public way) shown on such plat, or area reserved thereon for public use, or any lot line, or if it would affect any map, plan, or plat legally recorded before the adoption of any subdivision regulations, such amendment shall be approved by the Planning Commission by the same procedure, rules, and regulations as for a subdivision.

3-108.2 Procedures for Subdivision Where Future Resubdivision is Foreseen -- Whenever a parcel of land is subdivided and the subdivision plat shows one or more lots containing more than one acre of land or double the minimum required area for any zoning district in which the lot is located, and the Planning Commission has reason to believe that any such lot(s) will be resubdivided into smaller buildings sites, the Planning

Commission may require that the subdivision and development of such parcel of land allow for the future opening of public ways and the ultimate extension of adjacent public ways. The Planning Commission may also require that dedications providing for the future opening and extension of such public ways be indicated on the plat.

3-109 Vacation of Plats -- Any plat or any part of any plat may be vacated by the owner of the premise, at any time before the sale of any lot described therein, by a written instrument, to which a copy of such plat shall be attached, declaring the plat or part of the plat to be vacated. The Planning Commission shall follow the same procedure for approval of such instrument as required for approval of plats. The governing body may reject any such instrument which abridges or destroys any public rights in any of its public uses, improvements, or public ways. Such an instrument shall be executed, acknowledged, or approved, and duly recorded or filed; the instrument shall operate to void the recorded plat and divest all public rights in the public ways and public grounds and all dedications laid out or described in such plat. When any lot or lots have been sold the plat may be vacated in the manner herein provided only if all the owners of lots in such platted area join in the execution of such writing.

3-110 Variances

3-110.1 General -- If the Planning Commission finds that extraordinary hardships or practical difficulties may result from strict compliance with these regulations, a variance from these regulations may be granted; provided, such variances shall not have the effect of nullifying the general intent and purpose of these regulations and provided, further, that the Planning Commission shall not recommend variations unless it shall make findings based upon written evidence presented to it in each specific case that:

(1) the granting of the variance will not be detrimental to the public safety, health, or welfare, or be injurious to other property or improvements in the neighborhood in which the property is located;

(2) the conditions upon which the request for a variance is based are unique to the property for which the variance is sought and are not applicable generally to other property;

(3) because of the particular physical surroundings, shape, or topographical condition of the specific property involved, a particular hardship (not self-imposed) to the owner would result, as distinguished from a mere inconvenience, if the strict letter of these regulations were carried out; and

(4) the variance will not in any manner alter the provisions of the land development plan, the major street or road plan, or any zoning ordinance.

Where the Planning Commission concludes that the purpose of these regulations may be specifically served to an equal or greater extent by an alternative proposal, condition, or circumstance, it may approve other variations to these regulations.

3-110.2 Procedures -- A petition for any such variance shall be submitted in writing by the subdivider along with the initial filing of the plat. The petition shall state fully the grounds for the application and all of the facts upon which the petitioner is relying. In approving any variation from these regulations the Planning Commission shall state fully in the minutes the grounds for the variation and all of the facts upon which the decision is made.

3-110.3 Conditions -- In approving variations, the Planning Commission may impose such conditions as in its judgment will secure substantially the objectives, standards, and requirements of the regulations among these are the following:

(1) The Planning Commission shall not grant any variance within any floodplainany floodplain area unless the developer submits a study prepared by a registered professional engineer certifying that no increase in the 100 year flood level will result from the proposed development.

(2) Within flood prone areas variances shall only be issued upon a determination of the Planning Commission that the relief granted is the minimum necessary considering the flood potential hazard.

ARTICLE 4
SPECIFICATIONS FOR SUBMITTALS

4-101 Sketch Plat

4-101.1 General -- Sketch plats submitted to the Planning Commission shall be drawn to a convenient scale no smaller than one hundred (100) feet to an inch.

4-101.2 Features -- The sketch plat shall show:

(1) a scale drawing of the property and the names of the owners of adjoining property;

(2) size of the original tract(s) being subdivided;

(3) notation of any existing legal rights-of-way or easements, or other encumbrances affecting the property;

(4) approximate topography of the site, at no more than five (5) foot intervals, extended into adjacent properties;

(5) any areas which may be affected by flooding or located in the floodway or floodplain as determined by the most recent FEMA study;

(6) general public way and lot patterns;

(7) proposed phasing, if any;

(8) vicinity map of the property;

(9) date and approximate north point;

(10) name of owner, and documentation substantiating ownership as defined herein;

(11) name of plat designer;

(12) zoning classification; and

(13) concept for addressing water, sewer, and stormwater.

4-102 Preliminary Plat

4-102.1 General -- Ten (10) copies of the preliminary plat shall be prepared by an engineer licensed in the state of Tennessee, at a convenient scale no smaller than one hundred (100) feet to an inch. Sheets shall be numbered in sequence if more than one sheet is used.

4-102.2 Features -- The preliminary plat shall include:

(1) the location of the property to be subdivided with respect to surrounding property(s) and public way(s);

(2) the names of all adjoining property owners of record, or the names of adjoining developments;

(3) the names of adjoining public ways;

(4) the location and dimensions of all boundary lines of the property, figured to the nearest hundredth of a foot;

(5) the location of existing public ways, easements, water bodies, streams, topographic depressions, sinkholes, natural drainage features, and other pertinent features, such as swamps, railroads, buildings, parks, cemeteries, drainage ditches, and bridges, as determined by the Planning Commission;

(6) the location and width of all existing and proposed easements, alleys, and other public ways, and building setback lines;

(7) the location, dimension, and proposed area of all proposed or existing lots;

(8) the position of all existing or proposed buildings within proposed condominium developments;

(9) the location and dimension of all property proposed to be set aside for park or playground use or other public or private reservation, with designation of the purpose thereof, and conditions, if any, of the dedication or reservation;

(10) the limits of floodway, the floodway elevation, and floodway fringe areas and the associated regulatory flood elevation as well as the required flood protection elevation;

(11) the name and address of the owner(s) of land to be subdivided, the subdivider if other than the owner, and the land surveyor or other person preparing the plat;

(12) the date of the plat, approximate true north point, scale, and title of the subdivision;

(13) sufficient data to determine readily the general location, bearing, and length of all lines necessary to reproduce such lines within the area to be subdivided;

(14) name of the subdivision and all new public ways to be dedicated or constructed, as approved by the Planning Commission;

(15) the zoning classification of all zoned lots, as well as an indication of all uses other than residential proposed by the subdivider;

(16) the distance and bearing of one of the corners of the boundary of the subdivision to the nearest intersection of existing public ways

and to the original corner of the original survey of which it is a part;

(17) key map showing relation of the subdivision to all public ways, railroads, and water courses in all directions to a distance of at least one-half mile (suggested scale: one inch to one thousand (1,000) feet);

(18) contours at vertical intervals of not more than two (2) feet where the proposed subdivision has an average slope of five percent (5) or less, or at vertical intervals of not more than five (5) feet where the average slope exceeds five (5) percent (contours to be field surveyed or taken from aerial photographs acceptable to the Planning Commission);

(19) tax map and parcel numbers as recorded on the tax maps of Rutherford County;

(20) the location of all water and sewer lines, as well as the location of all existing and proposed fire hydrants; and

(21) roadway lighting plans if underground electricity is proposed;

(22) The following notations:

(a) explanation of drainage easements;

(b) explanation of site easements;

(c) explanation of reservations; and

(d) for any lot where public sewer or water systems are not available, the following:

(i) areas to be used for sewage disposal and their percolation results, or if the Planning Commission desires, any other acceptable data to show that the site can be served effectively by septic tanks;

(ii) water wells (existing and proposed); and

(iii) rock outcropping, marshes, springs, sinkholes, natural storm drains, and other outstanding topographical features;

(23) plat shall contain the name and stamp of the engineer who prepared the plat; and

(24) a form for endorsement of Planning Commission approval of the preliminary plat which shall read as follows:

Approved by the _____ Planning Commission, with such exceptions or conditions as are

indicated in the minutes of the Commission on _____.
date

Preliminary plat approval shall not constitute final approval for recording purposes.

4-103 Construction Plans

4-103.1 General -- Five (5) copies of construction plans shall be prepared for all improvements required by these regulations. Plans shall be drawn at a scale no smaller than one (1) inch equals fifty (50) feet. Plans shall be in compliance with the specifications in Article 4 of these regulations. Approval of plans must precede actual construction, and no final plat shall be considered by the Planning Commission until the required plans have been approved by the Director of Public Works and the Director of Utilities. The construction plans shall be prepared by a licensed engineer engaged in the practice of civil engineering.

4-103.2 Features -- The following shall be shown on the construction plans.

(1) Profiles showing existing and proposed elevations along center lines of all public ways.

(2) Where a proposed road intersects an existing public way or ways, the elevation along the center line of the existing public way within one hundred (100) feet of the intersection.

(3) Approximate radii of all curves, lengths of tangents, and central angles on all public ways.

(4) Proposed public ways, as required by the Planning Commission; where such are required, horizontal stationing shall be at fifty (50) foot intervals and cross-sectional elevations shall be to an accuracy of one tenth foot vertical on a line at right angles to the center line of the public way at the following points: the center line of the public way, each property line, and points twenty-five (25) feet inside each property line.

(5) Plans and profiles indicating the locations and typical cross-section of public way pavements, including curbs and gutters, sidewalks, drainage easements, rights-of-way, manholes, and catch basins.

(6) The location of public way signs.

(7) The location, size, and invert elevations of existing and proposed sanitary sewers, storm water drains, and fire hydrants, showing connection to any existing or proposed utility system.

(8) Exact location and size of all water, gas, or other underground utilities or structures.

(9) Location, size, elevation, and other appropriate description of any existing facilities or utilities, including but not limited to, existing public ways, sewers, drains, water mains, easements, water bodies, streams, and other pertinent features, such as swamps, railroads, buildings, and features noted on the land development plan or major street or road plan. "As-built" plans for all facility improvements as required in Section 3-106.1(2) of these regulations must be prepared by the engineer of record on the subdivision of the improvements as constructed and approved by the Director of Public Works, and the Director of Utilities prior to the dedication and/or certification that all required infrastructure improvements are satisfactory to meet town standards.

(10) The water elevations of adjoining lakes or streams and the approximate high- and low- water elevations of such lakes or streams shall be shown. All elevations shall be referred to the U.S.G.S. datum plane.

(11) If the subdivision borders a lake, river, or stream, the distance and bearings of a meander line established not less than twenty (20) feet back from the ordinary high water mark of such waterways.

(12) The developer shall prepare for any portion of a subdivision containing a flood prone area, or an area known to be subject to flooding, information necessary for the Planning Commission to determine the suitability of the particular site for the proposed development, as follows:

(a) plans drawn to scale showing the nature, location, dimensions, and elevation of any part of the subdivision within a flood prone area; existing or proposed structures or building sites, fill, storage of materials, and flood proofing measures, as specified in these regulations; and the relationship of the above to the location of the stream channel, floodway, floodway fringe, the regulatory flood elevation, and the regulatory flood protection elevation;

(b) a typical valley cross-section showing the channel of the stream, elevation of land areas adjoining each side of the channel, cross-sectional areas to be occupied by the proposed development, and high water information, if required by the Planning Commission;

(c) surface view plans showing elevations and contours of the ground;

(d) pertinent structures, fill or elevations of public ways;

(e) water supply, sanitary facilities, soil types, and other pertinent information, as required by the Planning Commission; and

(f) specifications for building construction and materials, flood proofing, filling, dredging, grading, storage of materials, water supply, and sanitary facilities.

(13) Contours at the same vertical interval as on the preliminary plat.

(14) In addition to the other requirements of this section, construction plans for condominium subdivisions shall contain "as built" drawings of all underground utilities, regardless of proposed ownership, and the construction design of all public facilities which are proposed for dedication to the governing body.

(15) A notation of construction plans approval by Director of Public Works and the Director of Utilities.

(16) Title, name, address, and signature and stamp of the engineer who prepared the plans.

(17) Date of plans, including any revision dates.

(18) Tennessee Department of Environment and Conservation, public water and sewer design layout and approval stamps, if applicable; also, actual design plans for filing in appropriate governmental representative's office.

4-104 Final Subdivision Plat

4-104.1 General -- Ten (10) copies of the final subdivision plat shall be prepared on transparent drafting material at a scale no smaller than one hundred (100) feet to the inch, on sheets of county register plat book size. The use of an appropriate smaller scale may be permitted for lots larger than two acres. When more than one sheet is required, an index sheet of the same size shall be filed showing the entire subdivision with the sheets numbered in sequence.

Construction plans as described in Section 4-103 of these regulations, shall have been approved prior to Planning Commission approval of the final subdivision plat.

4-104.2 Features -- The final plat shall include:

(1) The location of the property to be subdivided with respect to surrounding property(s) and public ways.

(2) The names of all adjoining property owners of record or the names of adjoining developments.

(3) The names of adjoining public ways.

(4) The exact boundary lines of the tract, determined by a field survey, showing angles to the nearest minute and distance to the nearest one hundredth of a foot. The adjusted accuracy of the survey shall meet or exceed the standards set forth in Title 66, Chapter 6 of the Tennessee Code Annotated, for the category of

survey required by these regulations. The category of survey shall be determined according to the average size of lots (see Table below) within the proposed subdivision. The survey shall be tied into the Tennessee Grid Coordinate System.

ACCURACY OF SURVEYS

Average Lot Size	Unadjusted Accuracy
One (1) Acre or Less	Category "I" Suburban Land Survey
Greater than One (1) Acre but Less than Ten (10) Acres	Category II" Rural Land Survey
Ten (10) Acres or More	Category "III Farm Land Survey

A distance and bearing shall be provided which will link a point on the boundary of the subdivision to a permanent property marker in right-of-way of the nearest prominent public way intersection.

(5) The location of all public ways, easements, water bodies, large streams or rivers, railroads, parks, and cemeteries.

(6) The limits of floodway, the floodway elevation, and floodway fringe areas and the regulatory flood elevation.

(7) The location and width of all easements and rights-of-way for public ways, as well as the building setback lines on all lots.

(8) The location, dimensions, and area of all lots. All dimensions shall be field run to the nearest one hundredth of a foot and angles to the nearest second. Lot areas shall be shown to the nearest tenth of a square foot.

(9) The location, area, and dimensions, to the accuracy set forth in Item 8 above, of all property to be set aside for park or playground use or other public or private reservation, with a designation of the purpose thereof, and conditions, if any, of the dedication or reservation.

(10) The final plat of a condominium subdivision shall contain, in addition to the other information required by this section:

(a) an "as-built" building location and boundary survey, to "American Land Title Association" or other similar standards, showing complete and accurate dimensions and angles of the boundary of the parcel(s) on which the condominium is located, together with exterior dimensions and location relative to those boundaries of the building(s) which constitute the condominium subdivision;

(b) some sort of datum plan or other suitable vertical location reference. In meeting these requirements, it is only necessary that the upper and lower limits of each level of each condominium unit be identified specifically in relation to the vertical reference (e.g., an appropriate permanent property marker or other acceptable reference datum or fixed known point). Elaborate exterior elevations and architectural detail are not necessary to satisfy this requirement; and

(c) any other special information which the Planning Commission may require to protect the rights of future owners of the condominium or the public in general.

(11) The name and address of the owner(s) of the land being subdivided.

(12) The name and address of the subdivider if other than the owner.

(13) The name, signature, and stamp of the land surveyor licensed in the State of Tennessee preparing the plat.

(14) The date of the plat, approximate true north point, scale, and title of the subdivision.

(15) Sufficient data to determine readily the location, bearing, and length of all lines necessary to reproduce such lines upon the ground. This shall include the radius, central angle, and tangent distance for the center line of the curved public ways and curved property lines that are not the boundary of curved public ways. The location of all permanent property markers and pins shall be indicated on the plat.

(16) The names of all public ways.

(17) The zoning classification of all lots, as well as an indication of uses other than residential proposed by the subdivider.

(18) The total acreage within the subdivision.

(19) Lot numbers, where required.

(20) The line size and location of all existing and proposed water, sewer, and storm drainage facilities.

(21) The location of all fire hydrants.

(22) The diameter and length of all driveway culverts.

(23) For any lot where public sewer or water system is not available, the following shall be shown:

(a) areas to be used for sewage disposal; and

(b) water wells (existing and proposed).

(c) water well disclaimer note if a well is utilized to service any platted lot. Such note must state that the lot in question may not be suitable for the utilization of a water well.

(24) Certifications in the form reproduced in this section shall appear upon the final plat. All required certificates shall bear the signature of the approving or authorizing agent at the time of application for final plat approval, except that the form for endorsement of the Planning Commission's approval for recording shall appear unsigned at the time of application for approval.

(25) Commitment note may be printed or stamped on the final plat reflecting location and dimension of easements, or extent of other agreements or factual data, in lieu of drafted illustration, when applicable, and as approved by the Planning Commission.

(26) Traffic study prepared by a licensed traffic engineer, when required by the Director of Public Works and/or the Planning Commission.

(27) The boundaries of detention basins, wetlands areas, and water quality buffer zones

4-104.3 Plat Certificates

(a) Certification showing that the applicant is the landowner; that he offers for dedication public ways, rights-of-way, and any site for public use; and that he consents to the subdivision plan.

CERTIFICATE OF OWNERSHIP AND DEDICATION

I (we) hereby certify that I am (we are) the owner(s) of the property shown and described hereon, and that I (we) hereby adopt this plan of subdivision with my (our) free consent, establish the minimum building restriction lines, and that offers of irrevocable dedication for all public roads, utilities, and other facilities have been filed as required by the Smyrna Municipal Subdivision Regulations. Book Number _____, Page _____,_____, 20__ _____

Date Owner

_____

Title (if action for partnership or corporation)

(b) Certification by a registered land surveyor as to the accuracy of the land survey.

CERTIFICATE OF ACCURACY

I hereby certify that the plan shown and described hereon is a true and correct survey to the accuracy required by the Smyrna, Tennessee, Municipal Planning Commission and that the permanent property markers have been or will be placed, as shown hereon, to the specifications of the Director of Public Works or his authorized representative.

_____, 20__ _____
Date Registered Engineer
or Surveyor

(c) Certification by appropriate governmental or quasi-governmental official(s) that sewage disposal and/or water system(s) has/have been installed.

CERTIFICATE OF APPROVAL OF UTILITY SYSTEMS

I hereby certify that the utility systems outlined or indicated on the final subdivision plat entitled _____ have been installed or performance bonds posted in accordance with current local and state government requirements.

Sewer and Water System

_____, 20__ _____
Date Director of Utilities

CERTIFICATE OF APPROVAL OF PRIVATE
SUBSURFACE SEWAGE DISPOSAL SYSTEM(S)

Certification of General Approval for installation of Subsurface Sewage Disposal Systems with Restrictions.

General approval is hereby granted for lots proposed hereon as being suited for subsurface sewage disposal with the listed and/or attached restrictions.

Before the initiation of construction, the location of the house or other structure and plans for the subsurface sewage disposal system shall be approved by the local health authority.

_____, 20__ _____
Date Local Health Authority

CERTIFICATE OF APPROVAL OF WATER SYSTEMS LOCATED IN THE SERVICE JURISDICTION OF CONSOLIDATED UTILITY DISTRICT OF RUTHERFORD COUNTY

I hereby certify that the subdivision plat entitled _____ has been approved by the engineers for Consolidated Utility District and will be submitted and approved by the Tennessee Department of Environment and Conservation, Division of Water Supply when applicable.

_____, 20__ _____
Date Consolidated Utility District Official

(d) Certification on the final plat by the Director of Public Works, Town Engineer, and the Director of Utilities that the subdivider has complied with one of the following.

(i) installation of all public way improvements in accordance with the requirements of these regulations; or

(ii) in lieu of compliance with subdivision improvement requirements, certification that surety instrument has been posted by the subdivider in an amount approved by the Director of Public Works to guarantee completion of all improvements.

Please note that as applies to (i) and (ii) above the certifications as required in Section 3-106.1 are dependent upon the submission of "as-built" plans as defined in Section 7-102.201 of these regulations.

CERTIFICATE OF APPROVAL OF PUBLIC WAYS

I hereby certify: (1) that all designated public ways on this final subdivision plat have been installed in an acceptable manner and according to the specifications of the Smyrna, Tennessee Subdivision Regulations, or (2) that a performance bond or other surety has been posted with the Planning Commission to guarantee completion of all required improvements in case of default.

_____, 20___ _____
Date Director of Public Works

(e) For a subdivision containing common open space or facilities, certification on the final plat of dedication of common areas in accordance with procedures established in these regulations.

CERTIFICATION OF COMMON AREAS DEDICATION

_____ in recording this plat has designated certain areas of land shown hereon as common areas intended for use by the homeowners in _____. (Name of Subdivision) for recreation and related activities. The above described areas are not dedicated for use by the general public, but are dedicated to the common use of the homeowners in _____ (Name of Subdivision), as more fully provided in Article _____, "Declaration and Restrictions" applicable to the _____ (Name of Subdivision) and recorded with this plat. Said Article _____ is hereby incorporated and made part of this plat.

_____, 20__ _____
Date Owner

(f) Certification on the final plat of Planning Commission approval for recording of the plat.

CERTIFICATION OF APPROVAL FOR RECORDING

I hereby certify that the subdivision plat shown hereon has been found to comply with the Smyrna, Tennessee Municipal Subdivision Regulations, with the exception of such variances, if any, as are noted in the minutes of the Planning Commission, and that it has been approved for recording in the Office of the County Register.

_____, 20__ _____
Date Secretary, Planning Commission

(g) Notation of Possible Flooding -- If any portion of the land being subdivided is subject to flooding as defined in these regulations, a notation shall be made on the plat that development or modification of the land within any floodway delineated within plat is prohibited and that development within floodway fringes areas delineated on the plat shall be done in such a manner that any structure shall be protected against flood damage by fill, to at least the flood protection elevation, which elevation shall be stated in the notation. Any additional restrictions imposed by the Planning Commission upon development within flood-prone areas also shall be indicated on the plat.

(h) Notation of Health Restrictions -- Any modifications or limitations which may be imposed by the Tennessee Department of Environment and Conservation shall be clearly indicated on the plat.

(i) Notation of geotechnical requirements - In all cases where potentially dangerous or damaging geological conditions such as sink holes are present within the boundaries of the subdivision or the platted lots therein as determined by the Director of Public Works, a notation shall be placed on the associated subdivision plat requiring a geotechnical report be prepared by a licensed professional prior to the issuance of a building permit on said lots.

(j) Notation of traffic study preparation - In all cases wherein the planning commission determines that the location and design of any proposed subdivision street accesses an existing town street, and the proposed design of this intersection is inadequate to meet the increased traffic requirements generated by the proposed subdivision or section of the subdivision in question, due to the number of lots therein, and/or due to the configuration or nature of the street system, a traffic study shall be prepared by a licensed traffic engineer, and a notation shall be placed on the final plat requiring the improvements and findings of said traffic study be implemented and constructed prior to final plat approval, or bonded as a part of the certificate of approval of public ways.

(k) Notation of engineered footings - In all cases wherein the planning commission determines that based on the presence of overly steep slopes and/or relatively unsuitable geological characteristics as pertain to the property being subdivided, engineered footings shall be required in such areas (on such lots) prior to the issuance of building permits thereon, and a notation shall be placed on the plat thereof. All such engineering footings shall be stamped and sealed by a registered engineer.

ARTICLE 5

REQUIREMENTS FOR IMPROVEMENTS, RESERVATIONS, AND DESIGN

5-101 General Requirements

5-101.1 Conformance to Applicable Rules and Regulations -- In addition to the requirements established herein, all subdivision plats shall comply with all applicable laws, ordinances, resolutions, rules, or regulations, including, but not limited to:

(1) all applicable provisions of Tennessee Law, regulations, or policy;

(2) the Town of Smyrna Muncipal Zoning Ordinance, any building and housing codes, and all other applicable laws or policies of the governing body;

(3) the adopted comprehensive plan, including the land use plan and the major road or street (public way) plan;

(4) the rules of the county health department and the Tennessee Department of Environment and Conservation;

(5) the rules, as applicable, of the Federal Highway Administration or Tennessee Department of Transportation, if the subdivision or any lot contained therein abuts a non-local highway; and

(6) the standards, ordinances, policies, and regulations adopted by all other boards, commissions, and agencies of the Town of Smyrna, where applicable.

Plat approval may be withheld if a subdivision is not in conformity with the above rules or with the provisions set forth in Section 1-104 of these regulations.

5-101.2 Self-Imposed Restrictions -- If the owner places restrictions on any of the land contained in the subdivision greater than those required by the Town of Smyrna Muncipal Zoning Ordinance or these regulations, such restrictions or reference thereto shall be recorded with the county register on a separate form, along with the final subdivision plat.

5-101.3 Permanent Property Markers -- The subdivider shall place permanent reference permanent property markers on the subdivision as required herein and as approved by a licensed surveyor. Permanent property markers shall be located and set as follows:

(1) Permanent property markers shall be located on public way right-of-way lines, at public way intersections, and sections, and at the beginning and ending points of curves. All permanent property markers shall be spaced so as to be within sight of each other.

(2) The external boundaries of a subdivision shall be monumented in the field by permanent property markers, such as a surveyor's pin, which shall be securely embedded. These permanent property markers shall be placed not more than fourteen hundred (1,400) feet apart in any straight line and at all corners or breaks at each end of all curves, at the point where a curve changes its radius, at all angle points in any line, and at all angle points along a meander line, said points to be not less than twenty (20) feet back from the bank of any river or stream, except that when such corners or points fall within a public way or proposed future public way, the permanent property markers shall be placed on the side line of the public way.

(3) All internal boundaries and those corners and points not referred to in the preceding paragraph shall be monumented in the field by like permanent property markers as described above. Such permanent property markers shall be placed at each end of all curves, at a point where a river changed its radius, and at all angle points in any line. All lot corners not following on any of the above described points shall be marked by iron rods, pipe, or pins at least eighteen (18) inches long and five-eighths (5/8) of an inch in diameter.

(4) The lines of lots that extend to rivers or streams shall be monumented in the field by iron pins at least eighteen (18) inches long and five-eighths (5/8) of an inch in diameter or by round or square iron bars at least eighteen (18) inches long. Such pins shall be placed at the point of intersection of the river or stream and lot line, with a meander line established not less than twenty (20) feet back from the bank of the river or stream.

(5) All permanent property markers and pins shall be properly set in the ground and approved by a surveyor or an engineer engaged in the practice of civil engineering prior to the time the Planning Commission approves of the final plat, or prior to the release of the bond where bond is made in lieu of improvements.

(6) All such permanent property markers and pins shall be flush with the ground and planted in such a manner that they will not be dislodged easily.

5-101.4 Character of the Land -- Land which the Planning Commission finds to be unsuitable for subdivision or development due to flooding, improper drainage, steep slopes, rock formations, adverse earth formations or topography, utility easements, or other features which would be harmful to the safety, health, and general welfare of inhabitants of the land and surrounding areas shall not be subdivided or developed unless adequate methods are formulated by the developer and approved by the Planning Commission, upon recommendation of the Director of Public Works and/or Town Planner, to solve the problems created by the unsuitable land conditions. Such land shall be set aside for such uses as will not be endangered by any feature deemed by the Planning Commission to be harmful to the public health, safety, and general welfare.

Where protection against flood damage is necessary, in the opinion of the Planning Commission, flood-damage protection techniques may include, as deemed appropriate by the Planning Commission any or all of the following:

(1) the imposition of any surety and deed restrictions enforceable by the Planning Commission to regulate the future type and design of uses within flood-prone areas;

(2) flood-protection measures designed so as not to increase, either individually or collectively, flood flows, height, duration, or damages, and so as not to infringe upon the regulatory floodway;

(3) installation of flood warning systems;

(4) the use of fill, dikes, levees, and other protective measures; and

(5) the use of flood-proofing measures, which may include:

(a) anchorage to resist flotation and lateral movement.

(b) accessory structures containing fully enclosed areas below the lowest floor that are subject to flooding shall be designed to automatically equalize hydrostatic flood forces on exterior walls by allowing for the entry and exit of floodwaters. Designs for meeting this requirement must either be certified by a registered professional engineer or architect or must meet or exceed the following minimum criteria: A minimum of two openings having a total net area of not less than one square inch for every square foot of enclosed area subject to flooding shall be provided. The bottom of all openings shall be no higher than one foot above grade. Openings may be equipped with screens, louvers, or other coverings or devices provided that they permit the automatic entry and exit of floodwaters.

(c) reinforcement of walls to resist water pressures.

(d) use of paints, membranes, or mortars to reduce seepage through walls.

(e) addition of mass or weight to structures to resist flotation.

(f) installation of pumps to lower water levels in structures.

(g) construction of water supply and waste treatment systems so as to prevent the entrance of or contamination of flood waters.

(h) installation of pumps or comparable facilities for subsurface drainage systems to relieve external foundation wall and basement flood pressures.

(i) building design and construction to resist rupture or collapse caused by water pressure of floating debris.

(j) installation of valves or controls on sanitary and storm drains which permit the drains to be closed to prevent backup of sewage and storm water into buildings or structures.

(k) location and installation of all electrical equipment, circuits, and appliances so that they are protected from inundation by the regulatory flood.

(l) location of storage facilities for chemicals, explosives, buoyant material, flammable liquids, or other toxic materials which would be hazardous to the public health, safety, and welfare at or above the regulatory flood protection elevation, or design of such facilities to prevent flotation of storage containers or damage to storage containers which could result in the escape of toxic materials.

The acceptability of any flood-protection methods formulated by the subdivider or his agent shall be determined by the Planning Commission, as recommended by staff, which shall be guided by the policies set forth in Sections 1-104 and 3-102.4, of these regulations.

5-101.5 Subdivision Name -- The proposed name of the subdivision shall not duplicate or too closely approximate phonetically the name of any other subdivision in the area covered by these regulations. The Planning Commission shall have authority to designate the name of the subdivision which shall be determined at sketch or preliminary plat approval.

5-101.6 Street Signs, Property Numbering and Street Naming, and Traffic Control -- The Planning Commission shall have the authority to require developers constructing new streets or rights-of-way to install all needed Traffic Control Devices. The devices shall be at least the minimum design specified in the Tennessee Department of Transportation "Manual of Standard Traffic Control Devices." The Planning Commission may require the subdivider to prepare a traffic study as cited in Section 5-103.101 and referenced in Section 4-104.3(k) herein. Such study shall be prepared by a licensed traffic engineer to determine the need for additional traffic control devices and public way improvements**.** The installation of street name signs shall be by the Town of Smyrna, and the Town shall furnish the sign. Decorative sign posts and/or holders may be installed by the developer upon approval by the Director of Public Works. All street naming and property numbering shall be approved by the Town Planner and be in conformance with 911 requirements.

5-102 Lot Requirements

5-102.1 Lot Arrangement -- The lot arrangement shall be such that there will be no foreseeable difficulties, for reasons of topography, flood hazards, or other conditions in securing building permits to build on all lots in compliance with the Town of Smyrna Muncipal Zoning Ordinance and state and county public regulations and in providing driveway access to buildings on such lots from an approved public way. No subdivision plat shall be approved which contains any lot(s) which have not been approved for building site(s) by the Tennessee Department of Environment and Conservation, when applicable. In all cases, all platted lots must be shown as being buildable lots. Any lots that cannot be shown as buildable lots shall be noted, and long term maintenance and ownership shall be indicated on the final plat.

Where reasonably feasible, lot arrangement shall be such that building sites will afford maximum utilization of energy conservation measures such as providing for solar access purposes.

Where a lot in any flood-prone area must be improved to provide a building site free from flooding, such improvements shall be made outside the floodway and by elevation or fill to at least the regulatory flood protection elevation (one hundred-year flood) for a distance extending at least twenty-five (25) feet beyond the limits of all intended principal structures and, additionally, extending a sufficient distance to include areas for subsurface sewage disposal if the lot is not to be connected to a public sanitary sewer system. Any fill shall be in compliance with the Stormwater Management Ordinance.

In nonresidential building sites outside a floodway but subject to flooding, the use of structural flood-proofing methods specified in Section 5-101.4 of these regulations, as an alternative to landfill, may be approved by the Planning Commission, as provided in Section 3-102.4, of these regulations.

5-102.2 Lot Dimensions -- Lot dimensions shall comply with the minimum standards of the Town of Smyrna Muncipal Zoning Ordinance, where applicable. Where lots are more than double the minimum area required by the Town of Smyrna Muncipal Zoning Ordinance, the Planning Commission may require that such lots be arranged so as to allow further subdivision and the opening of future public ways where they would be necessary to serve such potential lots, all in compliance with the Town of Smyrna Muncipal Zoning Ordinance and these regulations. Where solar access is a primary consideration, side lot lines shall generally run from due north to due south, regardless of the resulting angle of incidence with a public way. A variation of up to twenty-five (25) degrees east or west of this axis is permitted; further variations may be allowed, but only to provide a better public way or lot

plan. Unless varied by the Planning Commission, side lot lines shall be at right angles to street lines (or radial to curving street lines). This rule shall not be varied unless a variation therefrom will produce a better street or lot plan.

Dimensions of the corner lots shall be large enough to allow for erection of buildings, observing the minimum front-yard setback requirements from both public way rights-of-way.

No lot when subdivided shall have a greater width to depth ratio than "one to five" (1:5); therefore, the average depth of the lot shall be no greater than five times the average width of said lot, with the exception of lots fronting cul-de-sac turn around areas, or lots five (5) acres or greater in size. Lots that front such cul-de-sacs shall have no greater width to depth ratios than "one to six: (1:6) as measured along the average widths to depths of said lots.

Depth and width of properties reserved or laid out for business, commercial, or industrial purposes shall be adequate to provide for the off-street parking and loading facilities required for the type of use and development contemplated, and as established in the Town of Smyrna Muncipal Zoning Ordinance.

5-102.4 Double Frontage Lots and Access to Lots

5-102.401 Double Frontage Lots -- Double frontage and reversed frontage lots shall be avoided except where necessary to provide separation of residential development from traffic arterials, or to overcome specific disadvantages of topography and orientation.

5-102.402 Access from Arterial or Collector Public Ways -- The Planning Commission may require that lots shall not derive access exclusively from arterial or collector public ways. Where driveway access from such public ways may be necessary for several adjoining lots, the Planning Commission may require that the lots be served by a combined access drive in order to limit possible traffic hazards. Driveways shall be designed and arranged so as to avoid requiring vehicles to back onto arterial or collector public ways.

5-102.5 Soil Preservation, Grading, and Seeding

5-102.501 Soil Preservation and Final Grading -- No certificate of occupancy shall be issued until final grading has been completed in accordance with the approved construction plan of any subdivision.

Topsoil shall not be removed from residential lots or used as spoil, but shall be redistributed so as to provide cover on the lots, cover between any sidewalks and curbs, and be stabilized by seeding or planting. There shall be at least six (6) inches of topsoil cover (free of rock and debris) on the lots and at least four (4) inches of topsoil cover (free of rock and debris) between any sidewalks and curbs.

5-102.502 Lot Drainage -- Lots shall be laid out so as to provide positive drainage away from all buildings, and individual lot drainage shall be coordinated with the general storm drainage pattern for the area including subsurface drainage. Drainage shall be designed so as to avoid concentration of storm drainage water from each lot to adjacent lots.

The Planning Commission reserves the right to set minimum elevations on all floors, patios, and building equipment. This prerogative to establish elevation exists in addition to any ordinances that refer to floodplain elevation requirements. The content of the preceding paragraph is to give summary review powers over any calculated or historical evidence of storm water presence in overland or channel conditions.

The subdivision developer will ensure that all artesian ground waters of a permanent or temporary nature will be intercepted and carried away to primary drainage conduits along swaled ditches or in underground pipes on property line easements. Regardless of the location of property lines, intercept will be allowed by the Planning Commission at the point of artesian surfacing. The intent of this paragraph is to prevent flooding by overland flow. The developer is obligated to perform this work upon evidence of artesian water for a period of one (1) year following acceptance of all roads and utilities.

Any sinkhole or natural channel which serves at any time as a means of moving ground water into the subterranean will be protected by structure as approved by the Planning Commission, as well as by all rules promulgated by the Tennessee Department of Environment and Conservation. The allowed alternative to this is the construction of an alternative means of storm water relief as approved by the Planning Commission. In any event, location and elevation of future construction will be designated to allow for the worst possible conditions.

5-102.6 Debris and Waste -- No cut trees, timber, debris, junk, rubbish, or other waste materials of any kind shall be buried in any land or left or deposited on any lot or public way at the time of the issuance of a certificate of occupancy for the lot, and removal of such waste shall be required prior to issuance of any certificate of occupancy. Neither shall any such waste be left nor deposited in any area of the subdivision at the time of expiration of the performance bond or dedication of public improvements, whichever is sooner.

5-102.7 Lawn-grass Seed and Sod - Lawn-grass seed shall be sown at not less than four (4) pounds to each one thousand (1,000) square feet of land area. In the spring, the seed shall be sown between March 15 and May 15, and in the fall, between August 15 and September 30. The seed shall consist of a maximum of ten (10) percent rye grass by weight and minimum of ninety (90) percent of permanent bluegrass or fescue grass by weight. All seed shall have been tested for germination within one (1) year of the date of seeding, and the date of testing shall be on the label

containing the seed analysis. All lots shall be seeded from the roadside edge of the unpaved right of way back to a distance of twenty-five (25) feet behind the site of the principal residence on the lot. No certificate of occupancy shall be issued until re-spreading of soil and seeding of lawn has been completed, except that between October 1 and March 15 and between May 15 and August 15, the applicant shall submit cash in an amount to be determined by the Town Planner to ensure that re-spreading of soil and seeding of lawn will be done during the immediately following planting season as set forth in this section, and leave a cash escrow for performance in such amount as shall be determined by the Director of Public Works and submitted to the Town Planner. Sod may be used to comply with any requirement of seeding set forth herein.

5-102.8 Fencing -- Each subdivider or developer shall be required to furnish and install all fences wherever the Planning Commission determines that it is necessary due to hazardous conditions or other considerations. Such fences shall be constructed according to standards established by the Planning Commission, as appropriate, and shall be noted on the final plat as to height and required materials. No certificate of occupancy shall be issued for any affected lot until such fence improvements have been installed.

5-102.9 Water Bodies and Watercourses -- If a tract being subdivided contains a water body, or portion thereof, lot lines shall be so drawn as to distribute the entire ownership of the water body among the adjacent lots. The Planning Commission may approve an alternative plan whereby the ownership of and responsibility for safe maintenance of the water body is so placed that it will not become a governmental responsibility.

No more than ten (10) percent of the minimum area of a lot required under the Smyrna Muncipal Zoning Ordinance may be satisfied by land which is under water. For the purpose of this ordinance under water shall be defined as any area shown on FEMA flood maps as being within a designated floodway, or any permanent body of water. Where a watercourse separates a buildable area of a lot from the public way by which it has access, provisions shall be made for installation of culvert or other structure approved by the Planning Commission and no certificate of occupancy shall be issued for a structure on such a lot until the installation is completed and approved by the Planning Commission and/or the appropriate governmental representative.

5-103 Public Ways

5-103.1 General Requirements

5-103.101 Frontage on Improved Public Ways -- No subdivision shall be approved unless the area to be subdivided shall have frontage on and access from either an existing public road (except as provided in Section 1-109.107 of these regulations) or, if any new street construction or improvement is involved, a street approved and dedicated as provided in Articles 3 and 7 of these regulations. Any such public way must be suitably improved to the standards required by this article or be bonded by a performance bond

required under these regulations, with the roadway and right-of-way widths required by this article or the major street or road plan.

If on the advice of the Director of Public Works there are potential safety hazards associated with the public way entrance into any proposed subdivision, it shall be the responsibility of the subdivider to have a traffic study prepared for such entrance and submitted to the Planning Commission for analysis prior to the consideration of the final plat. Such study shall be prepared by a registered engineer. The findings of said study may be required to be incorporated into the final plat.

5-103.102 Grading and Improvement Plan -- Public ways shall be graded and improved to conform to the standards required by this section and shall be approved as to design and specification by the appropriate governmental representative in accordance with the specifications required herein. No surface shall be applied to the base of any proposed public way prior to the approval of the final plat of the subdivision or of the final approval of any section of the subdivision in question without having been properly inspected.

5-103.103 Improvements in Floodable Areas -- The finished elevation of proposed public ways subject to flood shall be no less than the regulatory flood protection elevation. The Planning Commission may require profiles and elevations of public ways to determine compliance with this requirement. All drainage structures shall be sufficient to discharge flood flows without increasing flood height. Where fill is used to bring the finished elevation of any public way to the required elevation, such fill shall not encroach upon a floodway, and the fill shall be protected against erosion by rip-rap, vegetative cover, or other methods deemed acceptable in the Stormwater Management Ordinance.

5-103.104 Topography and Arrangement

(1) All public ways shall be arranged so as to obtain as many of the building sites as possible at or above the grades of the public ways. Grades of public ways shall conform as closely as possible to the original topography. A combination of steep grades and curves shall not be permitted. Specific design standards are contained in Section 5-103.2 of these regulations.

(2) The use of public ways running in an east-west direction and lots on a north-south axis is encouraged for energy conservation of developments.

(3) All public ways shall be properly integrated with the existing and proposed system of public ways and dedicated rights-of-way as established in the Major Thoroughfare Plan or the Land Use Plan.

(4) All public ways shall be properly related to special traffic generators, such as industries, business districts, schools,

churches, and shopping areas or centers; to population densities; and to the pattern of existing and proposed land use.

(5) Minor public ways shall be laid out to conform as much as possible to the topography; to discourage use by through traffic; to permit efficient drainage and utility systems; and to require the minimum ways necessary to provide convenient and safe access to property.

(6) The use of curvilinear streets, roundabouts, cul-de-sacs, or "U"-shaped streets shall be encouraged where such use will result in a more desirable layout.

(7) Proposed public ways shall be extended to the boundary lines of the tract to be subdivided, unless prevented by topography or other physical conditions or unless, in the opinion of the Planning Commission, such extension is not necessary or desirable for the coordination of the subdivision design with the existing layout or the most advantageous future development of adjacent tracts.

(8) In business and industrial developments, public ways and other access routes shall be planned in connection with the grouping of buildings, location of rail facilities, and the provisions of alleys, truck loading and maneuvering areas, and walks and parking areas, so as to minimize conflict of movement between the various types of traffic, including pedestrian traffic.

5-103.105 Blocks

(1) Blocks shall have sufficient width to provide for two (2) tiers of lots of appropriate depth. Exceptions to this prescribed block width may be permitted in blocks adjacent to major public ways, railroads, or waterways.

(2) The lengths, widths, and shapes of blocks shall be determined with due regard to:

(a) provisions of adequate building sites suitable to the special needs of the type of use contemplated;

(b) the Town of Smyrna Municipal Zoning Ordinance as to lot sizes and dimensions;

(c) needs for convenient access, circulation, control, and safety of vehicular and pedestrian traffic; and

(d) limitations and opportunities of topography.

(3) Block lengths in residential areas shall not exceed sixteen hundred (1,600) feet nor be less than two hundred (200) feet, except as the Planning Commission deems necessary

to secure efficient use of land or desired features of the public way pattern. Wherever practicable, blocks along arterial or collector routes shall not be less than one thousand (1,000) feet in length.

(4) Blocks designed for industrial or commercial uses shall be of such length and width as may be deemed suitable by the Planning Commission.

(5) In any long block, the Planning Commission may require the reservation of an easement through the block to accommodate utilities, drainage, facilities, and/or pedestrian traffic.

A pedestrian walkway, not less than ten (10) feet wide, may be required by the Planning Commission through the appropriate center of any block more than eight hundred (800) feet long, where deemed essential to provide circulation or access to a school, playground, shopping center, transportation facility, or other community facility.

5-103.106 Access to Arterials and Collectors -- Where a subdivision borders on or contains an existing or proposed arterial or collector route, the Planning Commission shall require that access to such public way be limited such that:

(1) the subdivision of lots backing onto arterial routes shall not be approved, and the subdivision of lots backing onto collector routes shall be discouraged;

(2) a series of cul-de-sac, "U" shaped public ways, or short loops entered from and designed generally at right angles to such a parallel public way, with the rear lines of their terminal lots backing into the arterial or collector route shall be utilized; or

(3) a marginal access road or public way frontage road, separated from the arterial or collector route by a planting or grass strip and having access thereto at suitable points be utilized.

The number of residential or local public ways entering on arterial or collector routes shall be kept to a minimum.

5-103.107 Reserve Strips -- The creation of reserve strips adjacent to a proposed public way in such a manner as to deny access from adjacent property to such public way shall generally not be permitted.

However, in extraordinary circumstances the Planning Commission may allow creation of a reserve strip to enable a more appropriate pattern of lots or public ways. Where such is created the Planning Commission must agree to any and all future dispositions of same. A notation to this effect shall be entered on

the final plat or approved as an auxiliary instrument attached thereto.

5-103.108 Arrangement of Continuing and Dead-end Public Ways

A. Arrangement of Continuing Public Ways -- The arrangement of public ways shall provide for the continuation of major public ways between adjacent properties when such continuation is necessary for convenient movement of traffic, effective fire protection, efficient provision of utilities, and when such continuation is in accordance with the Major Thoroughfare Plan. If the adjacent property is undeveloped and the public way must be a dead-end public way temporarily, the right-of-way shall be extended to the property line. A temporary cul-de-sac turnabout shall be provided on all temporary dead-end public ways as required in the following turnabout standards, with a notation on the subdivision plat that land outside the normal public way right-of-way shall revert to abutting property owners whenever the public way is continued.

The Planning Commission may limit the length of temporary dead-end public ways in accordance with the design standards of these regulations.

B. Dead-End Public Ways -- Where a public way does not extend beyond the boundary of the subdivision and its continuation is not required by the Planning Commission for access to adjoining property, its terminus shall normally not be nearer to such boundary than fifty (50) feet. However, the Planning Commission may require the reservation of an appropriate easement to accommodate drainage facilities, pedestrian traffic, or utilities. A cul-de-sac turnabout shall be provided at the end of a dead-end public way in accordance with the design standards of these regulations.

For greater convenience to traffic and more effective police and fire protection, permanent dead-end public ways shall, in general, be limited in length in accordance with the design standards of these regulations.

5-103.109 Construction Access Ways

Every effort shall be made by subdivision developers and contractors to utilize temporary, alternative construction entrances in accordance with all Smyrna Municipal Ordinances and Tennessee Department of the Environment and Conservation regulations. Such access ways shall be exclusive of any public way(s) serving such subdivision(s). All vehicles involved in the development and construction of the respective subdivision(s) shall enter and exit such subdivision(s) strictly by way of the designated construction entrance(s). It shall be the responsibility of the Planning Commission to designate the location and number of such construction access route(s) serving said subdivision(s). Furthermore, it shall be the prerogative of the Planning Commission to decide which subdivision(s) will be required to utilize separate construction entrances. Such entrance(s) shall be specifically located on all preliminary plats and identified as such. The establishment and utilization of construction access ways does not in any way exempt the subdivision owner/developer from the posting of maintenance bonds or letters of credit as stipulated in Section 7-103 of these regulations. If temporary alternative construction entrances are not utilized or are not feasible, a maintenance letter of credit will be required to be posted prior to the recording of the final plat.

Wherever access ways for construction vehicles intersect paved public roads, provisions must be made to minimize the transport of sediment (mud) by runoff or vehicles tracking onto paved surface by clearing the area at the entrance of all vegetation, roots, and other objectionable material and placing a gravel layer at least 6-inches thick for a minimum of fifty (50) feet from the edge of the hard surface public road. Construction entrances shall be constructed in accordance with all Smyrna Muncipal Ordinances and Tennessee Department of the Environment and Conservation regulations. The Town of Smyrna Department of Public Works may order additional protective and remedial measures as deemed necessary. Where sediment is transported onto a public road surface, the roads shall be cleaned thoroughly at the end of each day or more often if deemed necessary. Sediment shall be removed from roads by shoveling or sweeping and be transported to a sediment-controlled disposal area. Street washing shall be allowed only after sediment is removed in this manner.

5-103.2 Design Standards

5-103.201 Purpose -- In order to provide public ways of suitable location, width, and improvement to accommodate prospective traffic and afford satisfactory access to police, fire-fighting, sanitation, and road-maintenance equipment, and to coordinate public ways so as to compose a convenient and safe system and avoid undue hardships to adjoining properties, the public way design standards set forth in this section are hereby required. (Public way

classification shall be as indicated on the Major Thoroughfare Plan otherwise, the public way shall be classified by the Planning Commission according to the definitions in Article 2 of these regulations.)

5-103.202 General Design -- The general design of all public ways shall conform to the standards in the table on the following pages.

5-103.203 Intersections

(1) Public ways shall intersect at right angles unless specifically approved by the Planning Commission. A proposed intersection of two (2) new public ways at an angle of less than seventy-five (75) degrees shall not be permitted. An oblique public way should be curved approaching an intersection and should be approximately at right angles for at least one hundred (100) feet therefrom. Not more than two (2) public ways shall intersect at any one point unless specifically approved by the Planning Commission.

(2) Proposed new intersections along one side of an existing public way shall coincide, wherever practicable, with any existing intersections on the opposite side of such public way. Jogs within public ways having center line offsets of less than one hundred fifty (150) feet shall not be permitted except where the intersected public ways have separated dual drives without median breaks at either intersection. Where public ways intersect arterial or collector routes, their alignment shall be continuous. Intersections of arterial or collector public ways shall be at least one thousand (1,000) feet apart.

(3) Minimum curb radius at the intersection of two (2) minor public ways shall be twenty-five (25) feet, and minimum curb radius at an intersection involving a collector public way shall be thirty (30) feet. Alley intersections and abrupt changes in alignment within a block shall have the corners cut off in accordance with standard engineering practice to permit safe vehicular movement.

(4) Where a public way intersection will involve earth banks or existing vegetation inside any lot corner that would create a traffic hazard by limiting visibility, the subdivider shall cut such ground or vegetation (including trees) in connection with the grading of the public right-of-way to the extent necessary to provide adequate site distance.

(5) Intersections shall be designed with a flat grade wherever practical. In hilly or rolling areas, at the approach to an intersection, a leveling area shall be provided having not greater than a two (2) percent grade for a distance of sixty (60) feet, measured from the nearest right-of-way line of the intersecting public way.

(6) The cross-slope on all public ways, including intersections, shall be three (3) percent or less.

5-103.204 Excess Right-of-Way -- A slope easement in excess of the right-of-way designated in these regulations may be required whenever, due to topography, additional width is necessary to provide adequate earth slopes. Such slopes shall not be less than three (3) to one (1).

5-103.205 Railroads and Limited Access Highways -- Railroad rights-of-way and limited access highways, where so located as to affect the subdivision of adjoining lands, shall be treated as follows:

(1) In residential areas, a buffer strip at least twenty-five (25) feet in depth in addition to the normally required depth of the lot may be required adjacent to the railroad right-of-way or limited access highway. This strip shall be part of the platted lots and shall be designated on the plat: "This strip is reserved for screening; the placement of structures hereon is prohibited."

(2) In commercial or industrial areas, the nearest public way extending parallel or approximately parallel to the railroad shall, wherever practicable, be at a sufficient distance therefrom to ensure suitable depth for commercial or industrial sites.

(3) Public ways parallel to a railroad, when intersecting a public way which crosses the railroad at grade, shall to the extent practicable, be at a distance of at least one hundred fifty (150) feet from the railroad right-of-way. Such distance shall be determined with due consideration of the minimum distance required for future separation of grades by means of appropriate approach gradients.

GENERAL DESIGN STANDARDS FOR PUBLIC WAYS

IMPROVEMENT	RESIDENTIAL PUBLIC WAY	NONRESIDENTIAL PUBLIC WAY (INDUSTRIAL, COMMERCIAL: OTHER)
Minimum Right-of-Way Width (In Feet)		
Neighborhood Minor	50	N/A
Minor	N/A	50
Neighborhood Collector	50	N/A
Collector	60	60
Arterial (2 lane)	80	80
Arterial (3 lane)	80	80
Arterial (4 lane)	90	92
Arterial (5 lane)	105	105
Minimum Width of Roadway or Paved Area (In Feet) Not Including Parking Requirements		
Neighborhood Minor	22	N/A
Minor	N/A	28
Neighborhood Collector	24	N/A
Collector	24 *	30
Arterial (2 lane)	28 *	28*
Arterial (3 lane)	36*	36*
Arterial (4 lane)	48*	48*
Arterial (5 lane)	60*	60*

Storm gutter width shall not be included as part of the roadway width requirement.

Maximum Percentage Grade		
Neighborhood Minor	10	N/A
Minor	N/A	8
Neighborhood Collector	10	N/A
Collector	8	6
Arterial	6	5

Pavement Crown

The paved surface shall have a crown of 2 percent slope from center line to the edge of pavement (or as otherwise specified by the Director of Public Works).

Minimum Center Line Radius of Curve (In Feet)**		
Neighborhood Minor	200	N/A
Minor	N/A	300
Neighborhood Collector	200	N/A
Collector	300	400
Arterial	500	600

* Or greater as determined by the Director of Public Works.
** Or greater as approved by the Director of Public Works based on design speed.

IMPROVEMENT	PUBLIC WAY	NONRESIDENTIAL PUBLIC WAY (INDUSTRIAL, COMMERCIAL: OTHER)

Minimum Length of Vertical Curves

Minor	100 feet, but not less than 28 feet for crest curve and 35 feet for sag curve for each algebraic difference in grade.
Neighborhood Collector	100 feet, but not less than 28 feet for crest curve and 35 feet for sag curve for each algebraic difference in grade
Collector	100 feet, but not less than 55 feet for crest curve and 55 feet for sag curve for each algebraic difference in grade.
Arterial	300 feet, but not less than 85 feet for crest curve and 75 feet for sag curve for each algebraic difference in grade.

Minimum Length of Tangents Between Reverse Curves (In Feet)

Minor	100	200
Neighborhood Collector	100	N/A
Collector	100	200
Arterial	300	400

Minimum Sight Distance (In Feet)*.

Minor	200	250
Neighborhood Collector	200	N/A
Collector	240	250
Arterial	300	400
Intersection	Across Corners--75 feet back	Across Corners--75 feet back

Minimum Turn around on Cul-de-sacs on Minor Public Ways (In Feet)

Right-of-way Diameter	100	160
Pavement Diameter	80	140

Length of Cul-de-sac

Permanent	Serving no more than 16 dwelling units and not exceeding 1,000 feet in length.
Temporary	Serving no more than 26 dwelling units and not exceeding 1,500 feet in length.

*. The sight distance is measured from a point 3.75 feet above the center line of the roadway surface to a point 6 inches above the center line of the roadway surface.

Minimum Radii (In Feet) of Return at Intersections

At right-of-way	25	30
At Pavement	30	55

5-103.206 Bridges -- Bridges of primary benefit to the subdivider, as determined by the Town Council, shall be constructed at the full expense of the subdivider without reimbursement from the governing body. The sharing of expenses for the construction of bridges not of primary benefit to the subdivider, as determined by the Town Council, shall be fixed by special agreement between the governing body and the subdivider. The cost shall be charged to the subdivider pro rata as to the percentage of his development so served.

5-103.207 Neighborhood Collectors -- Neighborhood collector public ways as defined by these Regulations must meet at least one of the following criteria:

(1) The street connects to an existing public way perpendicular to the existing public way;

(2) The street connects to adjoining undeveloped property;

(3) The street connects two or more subdivisions together;

(4) The street serves 26 or more dwelling units or is over 1,500 feet in length;

(5) There are more than two minor streets that connect to it.

Such public ways shall be designated by the Planning Commission upon review of the sketch plat for a new subdivision.

5-103.3 Right-of-way Width Dedication on Existing Public Ways -- Where a subdivision adjoins an existing narrow public way or where the major street or road plan or any zoning setback provisions indicate plans for realignment or widening of a public way that would require use of some of the land in the subdivision, the subdivider shall be required to dedicate, at his expense, areas for widening or realigning such public way as set forth below:

(1) the entire right-of-way shall be provided where any part of the subdivision is on both sides of the existing public way; or

(2) when the subdivision is located on only one side of an existing public way, one-half of the required right-of-way, measured from the center line of the existing pavement shall be provided.

5-103.4 Public Way Surfacing and Improvements -- After underground utilities have been installed, the subdivider shall construct curbs or curbs with gutters, where required, and shall surface or cause to be surfaced public ways to the widths prescribed in these regulations. Any required lane additions, lane widening, roadway widening, width expansions, open cuts

for utility installations or other operations requiring alterations of the existing roadway edges and/or roadway surface shall require a full width asphaltic topping overlay. No patch work or additions will be allowed without a full overlay. The thickness of the new overlay and the bituminous tack coat shall be in accordance with the requirements for each roadway classification as outlined in Article 6 Section 301 "Typical Sections" of these Subdivision Regulations. The length of the asphaltic topping overlay shall terminate at a suitable transition point of the existing roadway as to allow a smooth transition from new pavement to existing pavement. The length of the proposed full width overlay shall be approved by the Director of Public Works prior to commencement of work. It will be required to mill the existing asphalt topping to a depth to match the proposed overlay thickness, as to allow a smooth surface transition, at the ends where the proposed new asphalt is to terminate. The length of the required milling shall be adequate for the transition and shall be approved by the Director of Public Works. Bituminous tack coat shall be applied to the milled surface prior to installing the new asphalt topping overlay. No public way shall be surfaced until final approval of the subdivision plat has been obtained. Surfacing shall be of such character as is suitable for the expected traffic. Types and methods of paving shall be according to the specifications of the governing body, but in no event shall such construction be below the construction specifications set forth in the Article 6 of these regulations. Adequate provisions shall be made for culverts or other drains, and bridges, as required by the Director of Public Works.

All public way pavements, shoulders, drainage improvements and structures, any curb turnabouts, and sidewalks shall conform to all construction standards and specifications adopted by the Town of Smyrna and shall be incorporated into the construction plans required to be submitted by the developer for plat approval.

5-104 Road Construction Specifications -- The road construction specifications, Specifications for Stone Base Hot Asphaltic Mixture Surface, are included in these regulations as the Smyrna Typical Section, Section III and current T.D.O.T. Road and Bridge Specifications, and are adopted as a part hereof. These specifications shall be the minimum standards for any subdivision within the jurisdictional area. All roadway traffic markings shall be thermoplastic material and shall be installed in accordance with the TDOT Road and Bridge Specifications.

5-105 Drainage and Storm Sewers

5-105.1 General Requirements -- The Planning Commission shall not approve any plat of a subdivision which does not make adequate provisions for storm water or floodwater run-off channels or basins. The storm water drainage system shall be separate and independent from any sanitary sewer system. Storm sewers, where required, shall be designed by the Rational Method, or other methods as approved by the Director of Public Works, and a copy of design computations shall be submitted along with the necessary storm drainage construction plans. Inlets shall generally be provided so that surface water is not carried across or around any intersection, or any future planned intersection nor for a distance of more than six hundred (600) feet in the gutter. When calculations indicate that curb capacities are exceeded at a point, no further allowance shall be

used to intercept flow at that point. Surface water drainage patterns shall be shown for each and every lot and block.

5-105.2 Nature of Storm Water Facilities

5-105.201 Location -- The subdivider may be required by the Planning Commission to transport by pipe or open ditch any spring or surface water that may exist either prior to or as a result of the subdivision. Such drainage facilities shall be located in the public way right-of-way, where feasible, or in perpetual unobstructed easements of appropriate width and shall be constructed in accordance with the construction specifications contained in these regulations.

5-105.202 Accessibility to Public Storm Sewers

(1) Where a public storm sewer is accessible, the developer shall install storm sewer facilities, or if no outlets are within a reasonable distance, adequate provision shall be made for the disposal of storm waters, in accordance with the Stormwater Management Ordinance and Tennessee Department of Environment and Conservation regulations and subject to the specifications of the appropriate governmental representative; inspection of facilities shall be conducted to assure compliance. Inspection of facilities shall be conducted by the Director of Public Works or his designee during construction and shall be inspected prior to final acceptance and approval. At the discretion of the Public Works Director, the public storm sewer facility may be required to be internally video inspected by the Town of Smyrna at a rate set forth in the fee schedule and performed at the developer's expense.

(2) If a connection to a public storm sewer will be provided eventually, as determined by the Planning Commission, the subdivider shall make arrangements for future storm water disposal by a public system at the time the plat receives final approval. Provision for such connection shall be incorporated by inclusion in the performance bond required for the final subdivision plat.

5-105.203 Accommodation of Upstream Drainage Areas -- A culvert or other drainage facility shall in each case be large enough to accommodate potential runoff from its entire upstream drainage area, whether inside or outside the subdivision. Necessary facilities shall be sized based on the construction specifications and assuming conditions of maximum potential watershed development permitted by any zoning ordinance.

5-105.204 Effect on Downstream Drainage Areas -- The developer shall study the effect of stormwater drainage on existing downstream drainage facilities outside the area of the subdivision and shall provide the resulting report and drainage calculations. The Public Works Director or his designee shall review the submitted

information. Where it is anticipated that the additional runoff incident to the development of the subdivision will overload an existing downstream drainage facility, the Planning Commission may withhold approval of the subdivision until provisions have been made for adequate improvement of such drainage facilities. No subdivision shall be approved unless adequate drainage will be provided to an adequate drainage watercourse or facility.

5-105.205 Areas of Poor Drainage -- Whenever a plat is submitted for an area which is subject to flooding, the Planning Commission may approve such subdivision; provided, that the applicant fill the affected floodway fringe area of said subdivision to place public way elevations at no less than the regulatory flood elevation and first floor elevations (including basements) at no less than three (3**)** feet above the regulatory flood elevation. At a minimum, the lot serving any principal structure located within the 100 year flood area (the regulatory floodplain area) shall be filled to one (1) foot above the regulatory elevation for at least twenty-five (25) feet beyond the edge of said structure. Any fill material placed in the floodplain shall be offset by an equal amount of cut material removed within the floodplain. Proposed fill and cut volumes must be located on the same development site or on contiguous property or properties as long as adjoining property owners not involved in the project are not adversely affected by the cut and fill. Materials proposed for fill must be free of debris and organic matter and shall be approved by the Public Works Director or his designee. The plat of such subdivision shall provide for a floodway along the bank of any stream or watercourse of width sufficient to contain or move the water of the regulatory flood, and no fill shall be placed in the floodway; neither shall any building nor flood restrictive structure be erected or placed therein unless approved by the Director of Public Works and any other required State or federal authority. The boundaries of the floodway and floodway fringe area, and the regulatory flood elevation, shall be determined by the Planning Commission based upon the review specified in Section 3-104.2 of these regulations and the submission of flood data in construction plans as specified in Section 4-103 of these regulations. Any work or alteration within the floodplain shall not create additional areas of poor drainage and shall allow positive drainage at all times.

5-105.206 Floodplain Areas -- The Planning Commission may, when it deems it necessary for the health, safety, or welfare of the present and future population of the area or necessary to the conservation of water, drainage, and sanitary facilities, prohibit the subdivision of any portion of the property which lies within the floodplain of any stream or drainage course. The regulatory floodway shall be preserved from any and all alterations, including destruction or damage resulting from clearing, grading, or dumping of earth, waste material, or stumps. No work shall be performed in the floodwayunless approved by the Director of Public Works and any other required State or federal authority. Any subdivision which contains floodprone land shall be subject to the special provisions

set forth in Sections 3-102.4; 5-101.4; 5-104; and 5-105.2, of these regulations.

5-105.3 Dedication of Drainage Easements

5-105.301 General Requirements -- Where a subdivision or development is traversed by a watercourse, drainage way, channel, or stream, there shall be provided a storm water quality buffer zone easement extending two (2) times the width of the channel. The width shall be determined by measuring from the top-of-bank to top-of-bank of the watercourse. Said water quality buffer zone easement shall be located on both sides of said watercourse unless a licensed engineer, specializing in hydrology and stream buffer water quality studies, demonstrates to the satisfaction of the Director of Public Works or his designee that a lesser water quality buffer zone easement is required using adequate engineering quantitative methods. In this respect, all the criteria cited in section 5-101.4 of these regulations must be met and of such width and construction as will be adequate. Where open drainage ways are utilized they shall be designed for the twenty-five (25) year frequency flood. For the purposes of these regulations unmapped waterways and streams shall be defined as any creek, waterway, or stream shown on any official FEMA flood map panel, as well as any blue line stream, waterway, or channel shown on any U.S.G.S. quad sheet map and as determined by the Tennessee Department of Environment and Conservation**.** Water quality buffer zones shall be provided in accordance with the Stormwater Management Ordinance and the Tennessee Department of Environment and Conservation regulations.

5-105.302 Drainage Easements

(1) Where topography or other conditions are such as to make impractical the inclusion of drainage facilities within a public way right-of-way, perpetual unobstructed easements at least ten (10) feet in width for such facilities shall be provided across property outside the public way lines and with satisfactory access to public ways. Whenever said easements are required which do not parallel lot lines they shall be twenty (20) feet in width. Additional width may be required by the Public Works Director or his designee. Easements shall be indicated on the preliminary and final plats. Drainage easements shall be carried from the public way to a natural watercourse or to other drainage facilities.

(2) When a new drainage system is to be constructed which will carry water across private land outside the subdivision, appropriate drainage rights must be secured by legal document and indicated on the plat prior to approval of the preliminary plat.

(3) The applicant shall dedicate, when required by the Planning Commission, either in fee, or by drainage or conservation easement, the land on both sides of existing

watercourse to a distance to be determined by the Planning Commission.

(4) Along watercourses, low-lying lands, and within any floodway, as determined by the Planning Commission pursuant to Section 3-104 of these regulations, whether or not included in areas for dedication, shall be preserved and retained in their natural state as drainage ways. (See Section 2-102 for a definition of low-lying lands and watercourses).

(5) It shall be unlawful for any person or corporation, including the property owner, builder, or contractor to alter the drainage way in any Public Drainage easement, to plant trees in any drainage easement, to construct any building, fences, driveways or any structure as define herein, without prior written approval of the Director of Public Works.

5-105.303 Ditching, Concrete Ditch Paving, and Culverts and Storm Drains -- The design and construction details of drainage facilities shall be in accordance with the provisions of these regulations. The design and construction details of all such facilities shall be approved by the Director of Public Works.

5-106 Water Facilities

5-106.1 General Requirements

(1) Necessary action shall be taken by the developer to extend a water supply system capable of providing domestic water use and fire protection.

(2) Where a public water main is within reasonable access of the subdivision, as determined by the Planning Commission, the subdivider shall install adequate water facilities, including fire hydrants, subject to Town of Smyrna Water System Standard Specifications for New Construction, approval of the governing body, the Tennessee Department of Environment and Conservation, and these regulations. Such water lines shall be extended to the farthest end of the lot(s) being served, thereby.

(3) All public water mains, including those required for fire protection, shall not be less than six (6) inches in diameter.

(4) All water systems, whether public or private, located in a floodprone area shall be floodproofed to the regulatory flood protection elevation. All water supply facilities located below the regulatory flood protection elevation shall be designed to prevent the infiltration of floodwaters into the water supply system and discharges from the system into floodwaters.

(5) All water systems shall be constructed and tested by a contractor properly licensed to do so under Tennessee law.

5-106.2 Fire Hydrants -- Fire hydrants shall be required in all subdivisions; they shall be located no more than one thousand (1,000) feet apart by street and be within five hundred (500) feet of the building envelopes of any residential, commercial, or industrial structure as measured by the servicing streets, except in those conditions wherein locally adopted fire codes dictate a closer and more restrictive spacing of fire hydrants. Also, the Planning Commission may require closer spacing where physical conditions or types of structures so warrant. To eliminate future public way cuttings or openings, all underground utilities for fire hydrants, together with the fire hydrants themselves, and all other water supply improvements shall be installed before any final paving of a public way shown on the subdivision plat, unless otherwise approved by the Planning Commission.

5-107 Sewage Facilities

5-107.1 General Requirements -- The applicant shall install sanitary sewer facilities in a manner prescribed by the regulations of the Tennessee Department of Environment and Conservation and by any other applicable standards and specifications. For a more comprehensive statement of Smyrna's sewerage standards, see Town of Smyrna Sanitary Sewer Standard Specifications for New Construction. All plans shall be designed and approved in accordance with the rules, regulations, specifications, and standards, of any applicable governmental agency or appropriate unit thereof.

5-107.2 Mandatory Connection to Public Sewer System

(1) When public sanitary sewers are within reasonable access of the subdivision, as determined by the Planning Commission, the subdivider shall provide sanitary sewer facilities to each lot therein and shall connect these facilities to the public system. The subdivider shall provide sewers which meet standards set forth in the regulations of the Tennessee Department of Environment and Conservation and the Town of Smyrna.

(2) All sanitary sewer facilities located in a flood hazard area shall be floodproofed to the regulatory flood protection elevation. All sewer facilities located below the regulatory flood protection elevation shall be designed to prevent infiltration of floodwaters into the sewer system and discharges from the system into floodwaters.

5-107.3 Individual Disposal System Requirements -- If public sewer facilities are not available and individual disposal systems are proposed, lot areas shall not be less than the minimums specified in these regulations; all pertinent soil absorption tests shall be made as required by the Tennessee Department of Environment and Conservation and the results submitted to the Tennessee Department of Environment and Conservation for approval. The approval of any lot(s) served by a subsurface disposal system shall be made by the Smyrna Planning Commission and Town Council.

The individual disposal system, including the size of the septic tank and size of the tile fields or other secondary treatment device shall be located on the same platted lot as the dwelling unit serviced by said individual

system, and shall also be approved by the Tennessee Department of Environment and Conservation.

The Planning Commission may prohibit installation of sewage disposal facilities requiring soil absorption systems where such systems will not function due to high groundwater, flooding, or unsuitable soil characteristics. The Planning Commission may require that the subdivider note on the face of the plat and any deed of conveyance that soil absorption fields are prohibited in designated areas.

Alternative sewage disposal systems shall be reviewed and approved by the Smyrna Planning Commission and Town Council.

5-107.4 Design Criteria for Sanitary Sewers

5-107.401 General -- Sanitary sewer shall be designed and constructed in accordance with the Town of Smyrna Sewer System Standard Specifications for New Construction.

5-108 Pedestrian Ways

5-108.1 Sidewalks and Bicycle Paths -- Sidewalks and bicycle paths, where required by the Planning Commission, shall be included within the dedicated non-pavement right-of-way of all public ways as indicated in the following table and shall be improved as required by Section 5-103.4 of these regulations. Concrete curbs are required for all public ways where sidewalks are to be constructed. A median strip of grassed or landscaped area at least two (2) feet wide shall separate all sidewalks from adjacent curbs unless otherwise approved by the Planning Commission.

SIDEWALK DESIGN

Class of Street	Sidewalk Width	
	Public Way	Nonresidential Public Way (Industrial, Residential Commercial; Other)*
Minor Public Way	5 feet wide	6 feet wide
Neighborhood Collector	5 feet wide	N/A
Collector Public Way	5 feet wide	6 feet wide
Arterial Public Way	5 feet wide	6 feet wide

*Greenway or potential greenways as shown on the Town of Smyrna Greenway Plan shall be a minimum of eight (8) feet wide or as shown.

5-108.2 Pedestrian Accesses -- The Planning Commission may require, in order to facilitate pedestrian access from the public way to schools, parks, playgrounds, or other nearby public ways, perpetual unobstructed easements at least twenty (20) feet in width. Easements shall be indicated on the plat.

5-109 Utility Easements

(1) Easements down rear lot lines or additionally across lots, if deemed necessary by the Planning Commission, shall be provided for utilities (private or public). Such easements shall be at least ten (10) feet wide except for across-lot easements which shall be at least twenty (20) feet wide or larger as required by the Director of Utilities or his designee. The subdivider shall take such actions as are necessary to ensure the coordination and continuation of utility easements established on adjacent properties with those proposed within his development.

(2) Where topographical or other conditions are such as to make impractical the inclusion of utilities within rear lot lines, perpetual unobstructed easements at least ten (10) feet in width shall be provided along side lot lines with satisfactory access to public ways or rear lot lines. Additional width may be required by the Director of Utilities or his designee. Easements shall be indicated on the plat.

(3) Temporary construction easements exceeding the width of permanent easements may be required as necessary until completion of any one project.

(4) It shall be unlawful for any person or corporation, including the property owner, builder, or contractor to alter the utility easement, to plant trees in any utility easement, to construct any building, or fences, driveways or any structure as define herein without prior written approval of the Director of Utilities.

(5) Utility easements associated with major electric or natural gas transmission lines shall not comprise more than twenty (20) percent of the minimum area or lot requirement under the Town of Smyrna Municipal Zoning Ordinance on any subdivided lot. Moreover, such easements shall be located on subdivided lots in a manner that preserves functional useable front and rear yards in the opinion of the Planning Commission. It shall be the prerogative of the Planning Commission to determine which electric and/or natural gas lines constitute major transmission lines for the purposes of this regulation.

5-110 Public Uses

5-110.1 Plat to Provide for Public Uses -- Whenever a tract to be subdivided includes a school, recreation use, a portion of a major public way, or other public use, as indicated on the Land Use Plan and/or Major Thoroughfare Plan, or any portion thereof, such tract shall be suitably incorporated by the developer into his plat when first presented for review by the Planning Commission.

After proper determination of its necessity by the Planning Commission and the appropriate governmental representative(s) involved in the acquisition and use of such site, and after a determination has been made to acquire the site by the public agency, the site shall be suitably

incorporated by the developer into the plat prior to final approval by the Planning Commission and recording of the plat.

5-110.2 Referral to the Governmental Agency Concerned -- The Planning Commission shall refer any plat presented in accordance with Section 5-110.1. The Planning Commission may propose alternate areas for such acquisition and shall allow the appropriate governmental agency thirty (30) days for reply.

Among the areas which the Planning Commission may propose for public acquisition, when the commission deems it appropriate and consistent with the policies and purposes set forth in these regulations, is any land within a floodway or floodway fringe determined according to the procedure outlined herein.

The acquiring agency's recommendation, if affirmative, shall include a map showing the boundaries and area of the parcel to be acquired and an estimate of the time required to complete the acquisition.

5-110.3 Notice to Property Owner -- Upon receipt of an affirmative report, the Planning Commission shall notify the property owner and shall designate on all plats any areas proposed to be acquired by any governmental agency. Upon such designation by the Planning Commission, any reserved portion of any floodway or floodway fringe area shall not be altered from its natural state by the developer in any manner whatsoever.

5-110.4 Duration of Land Reservation -- The acquisition of land reserved by a governmental agency on the final plat shall be initiated within twenty-four (24) months of notification, in writing, from the owner that he intends to develop the land. Such letter of intent shall be accompanied by a plat of a proposed development and a tentative schedule of construction. Failure on the part of the governmental agency to initiate acquisition within the prescribed twenty-four (24) months shall result in the removal of the "reserved" designation from the property involved and the freeing of the property for development in accordance with these regulations.

5-111 Preservation of Natural Features and Amenities -- Existing features which would add value to residential development or to the area as a whole, such as trees, watercourses and falls, historic locations, and similar irreplaceable assets, shall be preserved in the design of the subdivision, as required by the Planning Commission. No change of grade of the land shall be effected nor shall any natural features be removed or relocated until a preliminary subdivision plat has been approved by the Planning Commission.

5-112 Nonresidential Subdivisions

5-112.1 General -- If a proposed subdivision includes land which is zoned for a commercial or industrial purpose, the layout of the subdivision with respect to such land shall make such provisions as the Planning Commission may require. A nonresidential subdivision also shall be subject to all the requirements of site plan approval set forth in the Town of Smyrna Muncipal Zoning Ordinance. Site plan approval may proceed simultaneously at the discretion of the Planning Commission. A nonresidential subdivision shall be subject to all the requirements of

these regulations, as well as such additional standards set forth by the Planning Commission, and shall conform to the Land Use Plan, Major Thoroughfare Plan, and the Town of Smyrna Municipal Zoning Ordinance.

5-112.2 Standards -- In addition to the principles and standards in the regulations, which are appropriate to the planning of all subdivisions, the subdivider shall demonstrate to the satisfaction of the Planning Commission that the public way, parcel, and block pattern proposed is specifically adapted to the uses anticipated and takes into account other uses in the vicinity. The following principles and standards shall be observed:

(1) proposed industrial parcels shall be suitable in areas and dimensions to the types of industrial development anticipated;

(2) public way rights-of-way and pavements shall be adequate to accommodate the type and volume of traffic anticipated;

(3) special requirements may be imposed by the governing body with respect to any public way, curb, gutter, and sidewalk design and construction specifications;

(4) special requirements may be imposed by the governing body with respect to the installation of public utilities, including water, sewer, and storm water drainage. The Planning Commission, in its discretion, may require that utilities be placed underground;

(5) every effort shall be made to protect adjacent residential areas from potential nuisances from the proposed nonresidential subdivision, including the provision of extra depth in parcels backing on existing or potential residential development, provisions for permanently landscaped buffer strips, and restrictive lighting conditions, when necessary; and

(6) public way carrying nonresidential traffic, especially truck, normally shall not be extended to the boundaries of adjacent existing or potential residential areas.

5-113 Maintenance of Common Property

5-113.1 General – Whenever a development includes areas, structures, features, or other items designated on a plat as “common area”, “common elements”, or some such similar designation, or in the event a developer shall undertake to maintain landscaping or some other feature in or on a public right of way (together or separately, “Common Property”), the following shall apply:

(1) An owners association must be established as a non-profit corporation or similar entity. Membership in such association must be mandatory for all owners and successive owners of property in the development, and each member must be legally obligated to pay dues and/or assessments for the pro rata cost of

maintenance and repair of, as appropriate, and taxes on, the Common Property.

(2) The association must have the power to record a Declaration of Lien on the property of any owner who has not paid dues and/or assessments.

(3) The association must have the power to provide and maintain casualty insurance on any structures or other improvements to assure replacement if same are damaged or destroyed.

(4) The association must have the power to provide and the responsibility to maintain liability insurance covering all Common Property.

(5) The Common Property must be clearly identified on the final plat; the final plat must also contain a plat note regarding the existence of a mandatory owners association.

(6) The developer must record an appropriate Declaration of Covenants and Restrictions covering the establishment and use of the Common Property as well as appropriate provisions for the establishment of the owners association, including but not limited to articles of organization and bylaws or their equivalent.

(7) The Common Property, along with the provisions of the Declaration of Covenants and Restrictions with respect to any Common Property, must be perpetual, and neither can be eliminated, deleted, amended, or modified without the consent of the Town evidenced by an amendment to the final plat and any other agreements or releases as deemed appropriate by the Town.

(8) The developer must either (i) convey title to the Common Property to the association or (ii) establish a perpetual easement over the Common Property with appropriate rights of access for the association.

(9) If the Common Property includes storm water drainage, detention or retention facilities, post-construction best management practices, landscaping or signage, or other elements which could reasonably be anticipated to have an adverse health, safety, welfare, or property values of the development or on persons or properties surrounding the development if not properly maintained or repaired, the Declaration of Covenants and Restrictions must provide that if the association fails to maintain or repair such Common Property to the standards required by Town ordinance or code the Town shall have the right and power, but not the responsibility, to maintain or repair such Common Property on behalf of the association and if the Town elects to so maintain or repair such Common Property, to pro rate assess property owners in the development in the name of the association to recover the costs of such maintenance or repair, and to record a Declaration

of Lien against the property of any owner in the development who has not paid such assessment within the time allowed.

(10) The Declaration of Covenants and Restrictions must also establish the Town as a third party beneficiary of the covenants and restrictions with the right and power, but not the responsibility, to enforce any and all such covenants and restrictions with regards to Common Property within the development.

(11) The developer must undertake to assure that all prospective purchasers within the development receive copies of the Declaration of Covenants and Restrictions and of all other documentation related to the owners association.

(12) The developer must submit evidence satisfactory to the Town staff that all the above requirements have been fulfilled prior to the issuance of any building permits for the development.

ARTICLE 6

PUBLIC WORKS SPECIFICATIONS

SECTION I. GENERAL

6-101 Jurisdiction - These rules and regulations governing the construction of roads and streets shall apply within the planning jurisdiction of the Smyrna Municipal Planning Commission.

6-102 Purpose - The purpose of these specifications is to establish standards of design and construction, including construction procedures and quality of materials that are adequate to assure the safety, convenience, and welfare of the people within the planning jurisdiction.

6-103 Definitions

A.A.S.H.T.O. - American Association of State Highway and Transportation Officials.

A.S.T.M. - American Society for Testing Materials.

Enforcing Officer - That individual designated by the Town Council of the local government to enforce these provisions.

Engineer - An engineer licensed by the State Board of Architectural and Engineer Examiners pursuant to Section 62-202, Tennessee Code Annotated.

Local Government - The town or county government having jurisdiction within the area where a development is located.

Local Government Engineer - That individual designated by the local government to receive and review plans submitted in conformance with the provisions of this section.

MUTCD – Manual of Uniform Traffic Control Devices

Standard Specifications - Standard Specifications for Road and Bridge Construction, Tennessee Department of Transportation, March 1, 2006, and subsequent revisions and additions.

TDEC – Tennessee Department of Environment and Conservation

6-104 Approvals - All construction plans of roads and streets shall be prepared and submitted to the Director of Public Works. The content and submission procedure shall be as set forth in Section II, Planning.

6-105 Acceptance - Acceptance for public maintenance of any facilities or improvements located within any subdivision may only be accomplished by formal action of the governing body in the manner established in Section 7-101.7 of these regulations. Any approval of plans, etc., submitted in conformance with these provisions, shall not in any manner bind or presuppose acceptance of these facilities by the governing body.

6-106 Responsibility of Compliance - In all matters involving enforcement of, or compliance with, the provisions contained herein, the subdivider (as defined in Section 2-102) is considered as the party legally responsible for performance; and the use of engineers, contractors, or other agents shall in no way diminish or absolve the subdivider of this basic responsibility.

SECTION II. PLANNING

6-201 Plan Preparation - All construction plans for improvements within land subdivisions shall be prepared by engineers licensed to practice within the State of Tennessee. The plans shall bear the stamp and signature of the individual responsible for their preparation.

6-202 Content - The information set forth in Section 4-103 shall be required upon each and every plan submitted hereunder. In any instance where special conditions may warrant, additional data may be required.

6-203 Submission, Review, and Approval - When the plans are complete, with all required data entered thereon, they shall be submitted to the local government engineer for review and comment prior to formal presentation before the Planning Commission. If the Town Planner finds that the plans are in order and all required information is presented, he shall forward the plans to the Planning Commission for review and approval. Should any disagreement between the local government engineer and the subdivider (or his engineer) arise as to the nature of, or requirement for, any particular improvement or facility, the plans may be forwarded to the Planning Commission for arbitration of the dispute.

Action by the Planning Commission may come in the form of unconditional approval of the plans as submitted, conditional approval, or disapproval. Should the commission's action come in the form of conditional approval, the applicant may modify and resubmit the plans to the Town Planner for further review. Should the local Town Planner find that the conditions established by the commission have been met, he may so certify in which instance the plans shall be considered approved.

6-204 Action Upon Approval - Once the plans have received approval as set forth above, construction may begin.

SECTION III. Typical Sections

6-301 Drawings

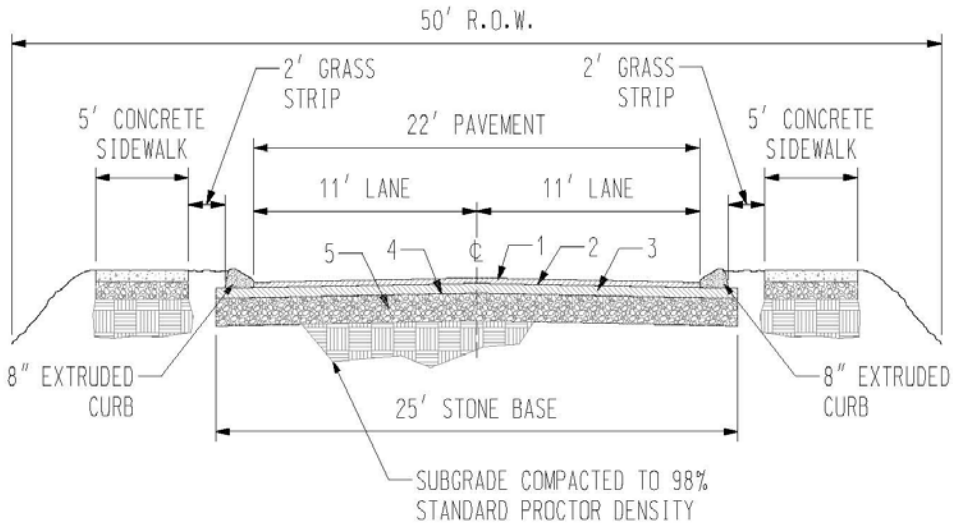

1. 1.5″ ASPHALTIC CONCRETE SURFACE (307-CW)
2. TACK COAT (403) 0.10 GAL/S.Y.
3. 3″ ASPHALTIC CONCRETE BASE (307-B MODIFIED)
4. PRIME COAT (402) 0.30 GAL/S.Y.
5. 8″ COMPACTED STONE BASE MINIMUM 97% STANDARD PROCTOR DENSITY (GRADING D PUG MILL MIX)

NOTES:
1. SIDEWALK REQUIRED ON BOTH SIDES OF THE ROAD. (SEE SIDEWALK STANDARD DETAIL)
2. SEE 8″ EXTRUDED CONCRETE CURB DETAIL.

TOWN OF SMYRNA TENNESSEE 1869

RESIDENTIAL NEIGHBORHOOD MINOR STREET WITH 8" EXTRUDED CONCRETE CURB (50' R.O.W.)

REVISION:	0			
DATE:	3/09/2009			

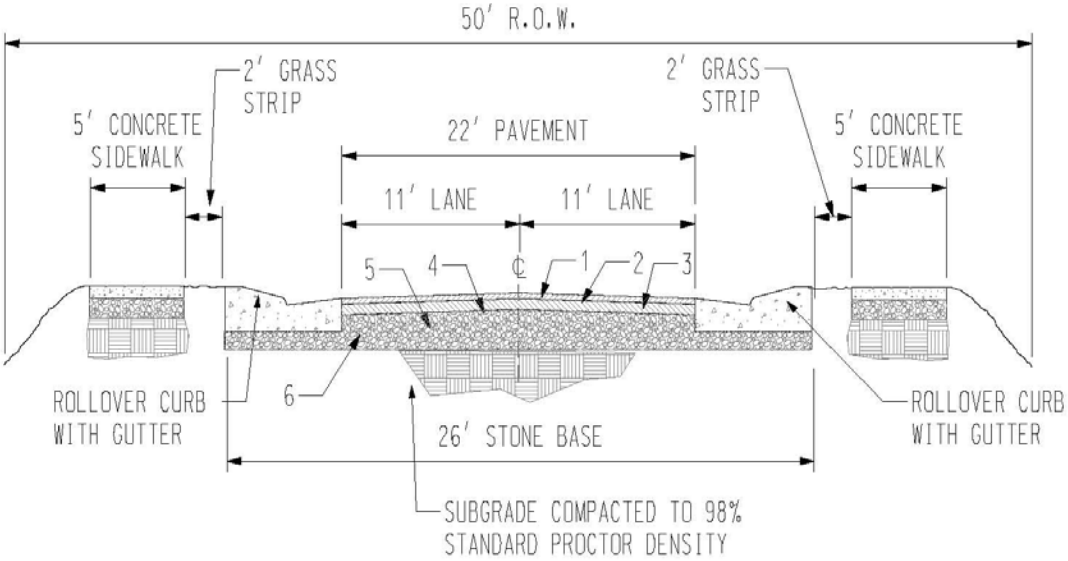

1. 1.5" ASPHALTIC CONCRETE SURFACE (307-CW)
2. TACK COAT (403) 0.10 GAL/S.Y.
3. 3" ASPHALTIC CONCRETE BASE (307-B MODIFIED)
4. PRIME COAT (402) 0.30 GAL/S.Y.
5. 8" COMPACTED STONE BASE MINIMUM 97% STANDARD PROCTOR DENSITY (GRADING D PUG MILL MIX)
6. BASE MATERIAL FOR CURB AND GUTTER SHALL BE NO LESS THAN 4".

NOTES:

1. SIDEWALK REQUIRED ON BOTH SIDES OF THE ROAD. (SEE SIDEWALK STANDARD DETAIL SHEET)
2. STANDARD ROLLOVER CURB AND GUTTER (SEE ROLLOVER CURB WITH GUTTER STANDARD DETAIL).

TOWN OF SMYRNA TENNESSEE 1869

RESIDENTIAL NEIGHBERHOOD MINOR STREET WITH ROLLOVER CURB AND GUTTER (50' R.O.W.)

REVISION:	0			
DATE:	3/09/2009			

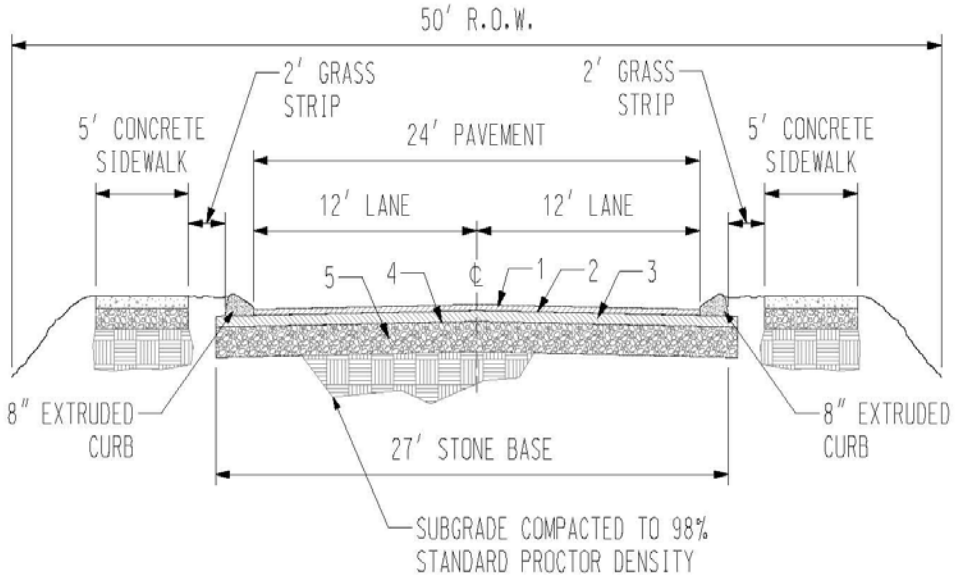

1. 1.5″ ASPHALTIC CONCRETE SURFACE (307-CW)
2. TACK COAT (403) 0.10 GAL/S.Y.
3. 3″ ASPHALTIC CONCRETE BASE (307-B MODIFIED)
4. PRIME COAT (402) 0.30 GAL/S.Y.
5. 8″ COMPACTED STONE BASE MINIMUM 97% STANDARD PROCTOR DENSITY (GRADING D PUG MILL MIX)

NOTES:
1. SIDEWALK REQUIRED ON ONE SIDE OF THE ROAD. (SEE SIDEWALK STANDARD DETAIL)
2. SEE 8″ EXTRUDED CONCRETE CURB DETAIL.

RESIDENTIAL NEIGHBORHOOD COLLECTOR STREET WITH 8" EXTRUDED CONCRETE CURB (50' R.O.W.)

REVISION:	0			
DATE:	03/09/2009			

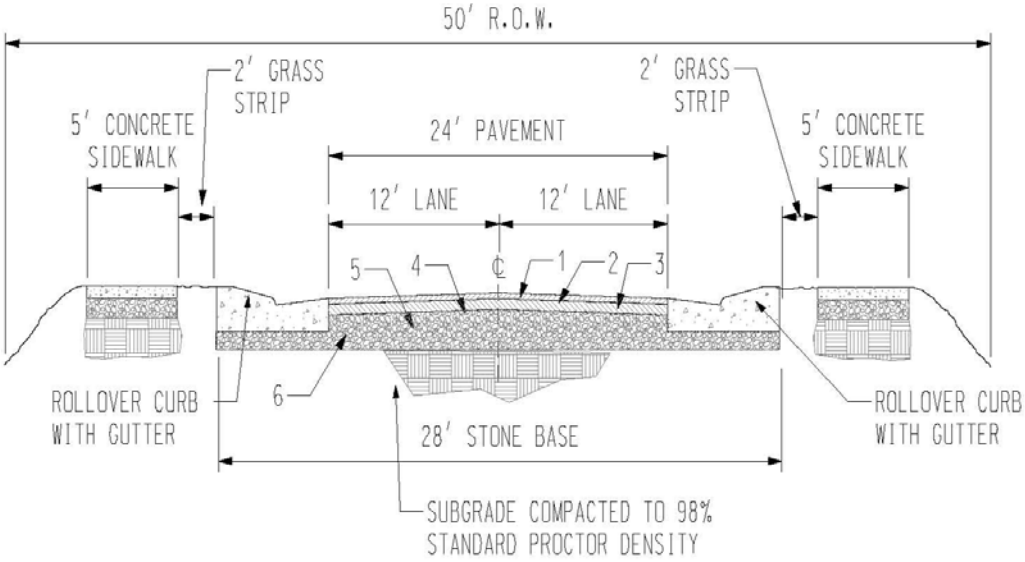

1. 1.5" ASPHALTIC CONCRETE SURFACE (307-CW)
2. TACK COAT (403) 0.10 GAL/S.Y.
3. 3" ASPHALTIC CONCRETE BASE (307-B MODIFIED)
4. PRIME COAT (402) 0.30 GAL/S.Y.
5. 8" COMPACTED STONE BASE MINIMUM 97% STANDARD PROCTOR DENSITY (GRADING D PUG MILL MIX)
6. BASE MATERIAL FOR CURB AND GUTTER SHALL BE NO LESS THAN 4".

NOTES:

1. SIDEWALK REQUIRED ON BOTH SIDES OF THE ROAD. (SEE SIDEWALK STANDARD DETAIL SHEET)
2. STANDARD ROLLOVER CURB AND GUTTER (SEE ROLLOVER CURB WITH GUTTER STANDARD DETAIL).

TOWN OF SMYRNA TENNESSEE 1869

RESIDENTIAL NEIGHBERHOOD COLLECTOR STREET WITH ROLLOVER CURB AND GUTTER (50' R.O.W.)

REVISION:	0			
DATE:	3/30/2009			

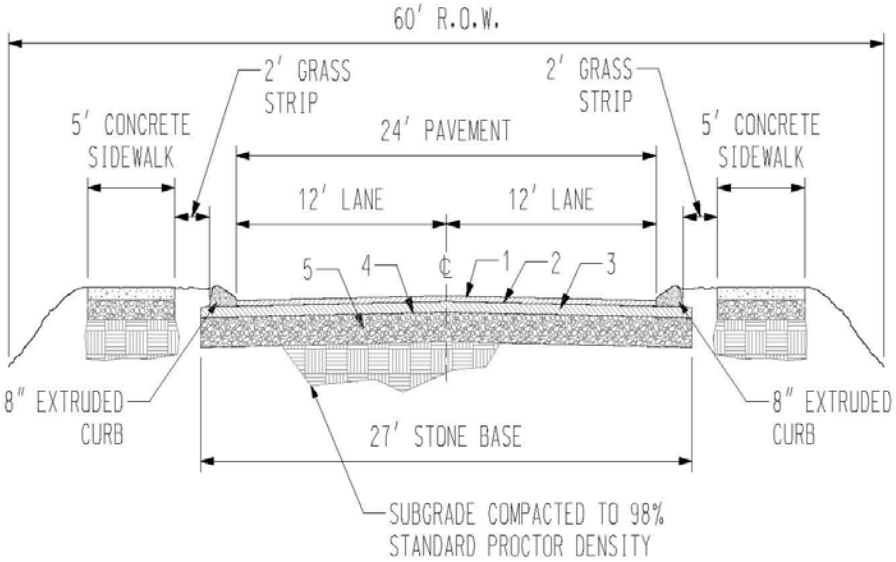

1. 1.5" ASPHALTIC CONCRETE SURFACE (307-CW)
2. TACK COAT (403) 0.10 GAL/S.Y.
3. 3" ASPHALTIC CONCRETE BASE (307-B MODIFIED)
4. PRIME COAT (402) 0.30 GAL/S.Y.
5. 8" COMPACTED STONE BASE MINIMUM 97% STANDARD PROCTOR DENSITY (GRADING D PUG MILL MIX)

NOTES:
1. SIDEWALK REQUIRED ON BOTH SIDES OF THE ROAD. (SEE SIDEWALK STANDARD DETAIL)
2. SEE 8" EXTRUDED CONCRETE CURB DETAIL.

TOWN OF SMYRNA TENNESSEE 1869

RESIDENTIAL COLLECTOR STREET WITH 8" EXTRUDED CONCRETE CURB (60' R.O.W.)

REVISION:	0			
DATE:	3/09/2009			

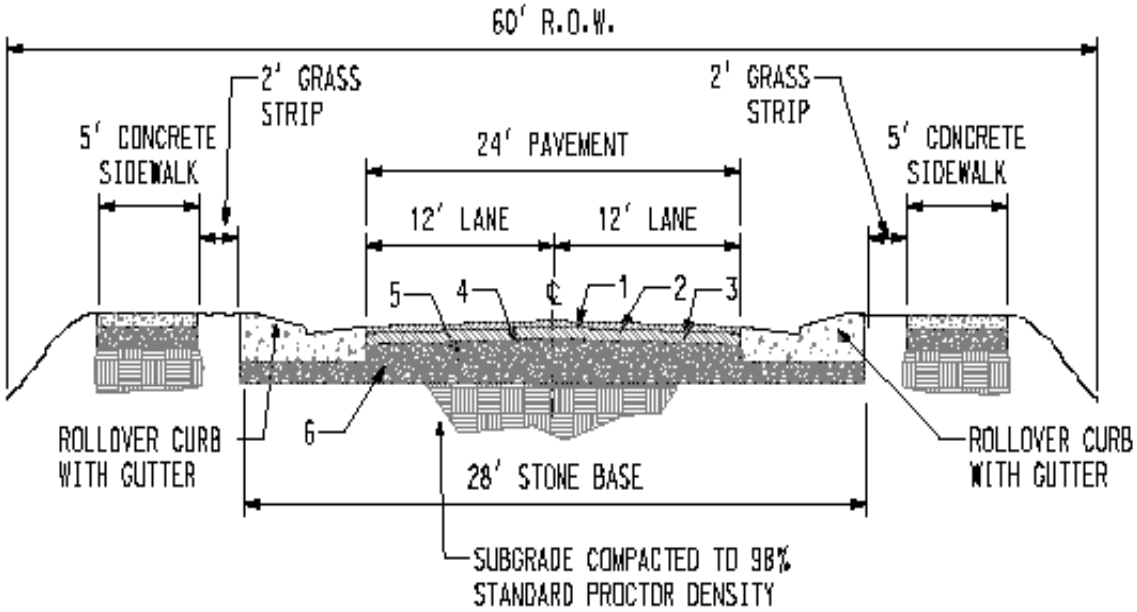

1. 1.5" ASPHALTIC CONCRETE SURFACE (307-CW)
2. TACK COAT (403) 0.10 GAL/S.Y.
3. 3" ASPHALTIC CONCRETE BASE (307-B MODIFIED)
4. PRIME COAT (402) 0.30 GAL/S.Y.
5. 8" COMPACTED STONE BASE MINIMUM 97% STANDARD PROCTOR DENSITY (GRADING D PUG MILL MIX)
6. BASE MATERIAL FOR CURB AND GUTTER SHALL BE NO LESS THAN 4".

NOTES:

1. SIDEWALK REQUIRED ON BOTH SIDES OF THE ROAD. (SEE SIDEWALK STANDARD DETAIL SHEET)
2. STANDARD ROLLOVER CURB AND GUTTER (SEE ROLLOVER CURB WITH GUTTER STANDARD DETAIL).

RESIDENTIAL COLLECTOR STREET WITH ROLLOVER CURB AND GUTTER (60 R.O.W.)

REVISION:	0			
DATE:	3/09/2009			

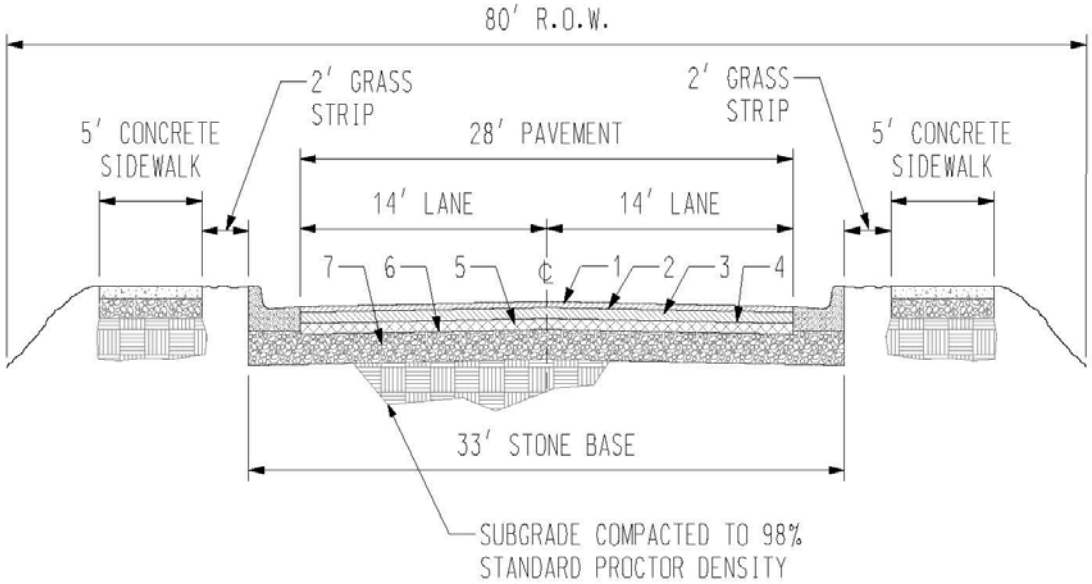

1. 1.5″ ASPHALTIC CONCRETE SURFACE (307-CW)
2. TACK COAT (403) 0.10 GAL/S.Y.
3. 3″ ASPHALTIC CONCRETE BASE (307-B MODIFIED)
4. TACK COAT (403) 0.10 GAL/S.Y.
5. 3″ ASPHALTIC CONCRETE BASE (307-A MIX)
6. PRIME COAT (402) 0.30 GAL/S.Y.
7. 8″ COMPACTED STONE BASE MINIMUM 97% STANDARD PROCTOR DENSITY (GRADING D PUG MILL MIX)

NOTES:

1. SIDEWALKS REQUIRED ON BOTH SIDES OF THE ROAD. (SEE SIDEWALK STANDARD DETAIL SHEET)
2. STANDARD CURB AND GUTTER (24″ GUTTER WIDTH AND 6″ CURB WIDTH).

RESIDENTIAL ARTERIAL STREET (2-LANE) (80' R.O.W.)

REVISION:	0			
DATE:	5/02/2008			

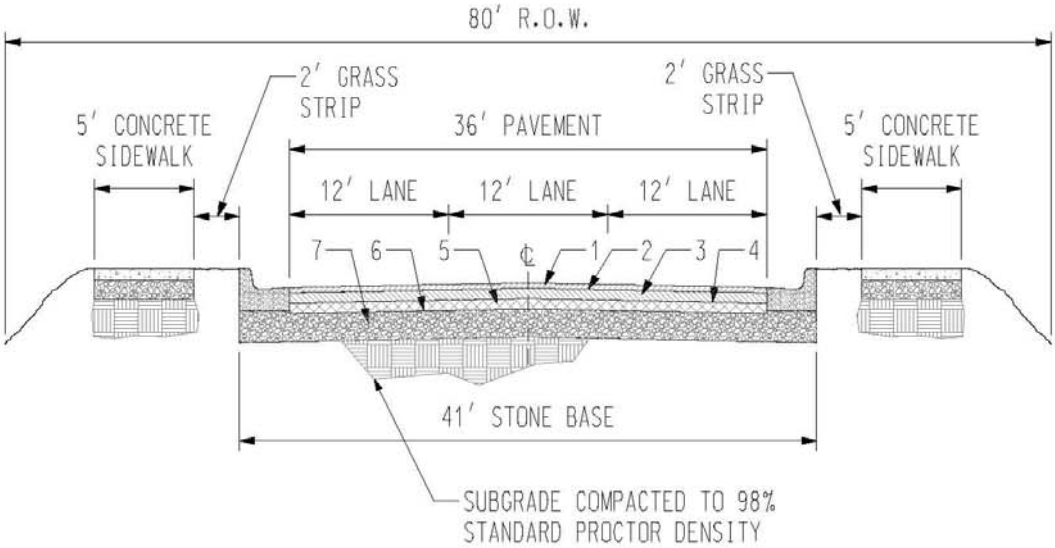

1. 1.5" ASPHALTIC CONCRETE SURFACE (411-D)
2. TACK COAT (403) 0.10 GAL/S.Y.
3. 3" ASPHALTIC CONCRETE BASE (307-B MODIFIED)
4. TACK COAT (403) 0.10 GAL/S.Y.
5. 3" ASPHALTIC CONCRETE BASE (307-A MIX)
6. PRIME COAT (402) 0.30 GAL/S.Y.
7. 8" COMPACTED STONE BASE MINIMUM 97% STANDARD PROCTOR DENSITY (GRADING D PUG MILL MIX)

NOTES:

1. SIDEWALKS REQUIRED ON BOTH SIDES OF THE ROAD. (SEE SIDEWALK STANDARD DETAIL SHEET)
2. STANDARD CURB AND GUTTER (24" GUTTER WIDTH AND 6" CURB WIDTH).

TOWN OF SMYRNA TENNESSEE 1869

RESIDENTIAL ARTERIAL STREET (3-LANE) (80' R.O.W.)

REVISION:	0			
DATE:	5/02/2008			

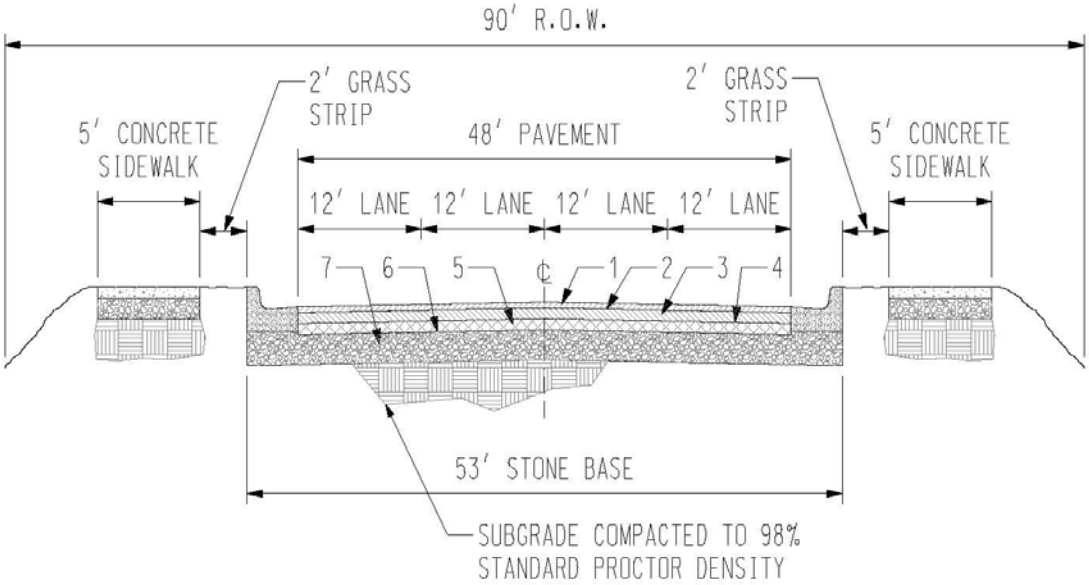

1. 1.5" ASPHALTIC CONCRETE SURFACE (307-CW)
2. TACK COAT (403) 0.10 GAL/S.Y.
3. 3" ASPHALTIC CONCRETE BASE (307-B MODIFIED)
4. TACK COAT (403) 0.10 GAL/S.Y.
5. 3" ASPHALTIC CONCRETE BASE (307-A MIX)
6. PRIME COAT (402) 0.30 GAL/S.Y.
7. 8" COMPACTED STONE BASE MINIMUM 97% STANDARD PROCTOR DENSITY (GRADING D PUG MILL MIX)

NOTES:

1. SIDEWALKS REQUIRED ON BOTH SIDES OF THE ROAD. (SEE SIDEWALK STANDARD DETAIL SHEET)
2. STANDARD CURB AND GUTTER (24" GUTTER WIDTH AND 6" CURB WIDTH).

TOWN OF SMYRNA TENNESSEE 1869

RESIDENTIAL ARTERIAL STREET (4-LANE) (90' R.O.W.)

REVISION:	0			
DATE:	5/02/2008			

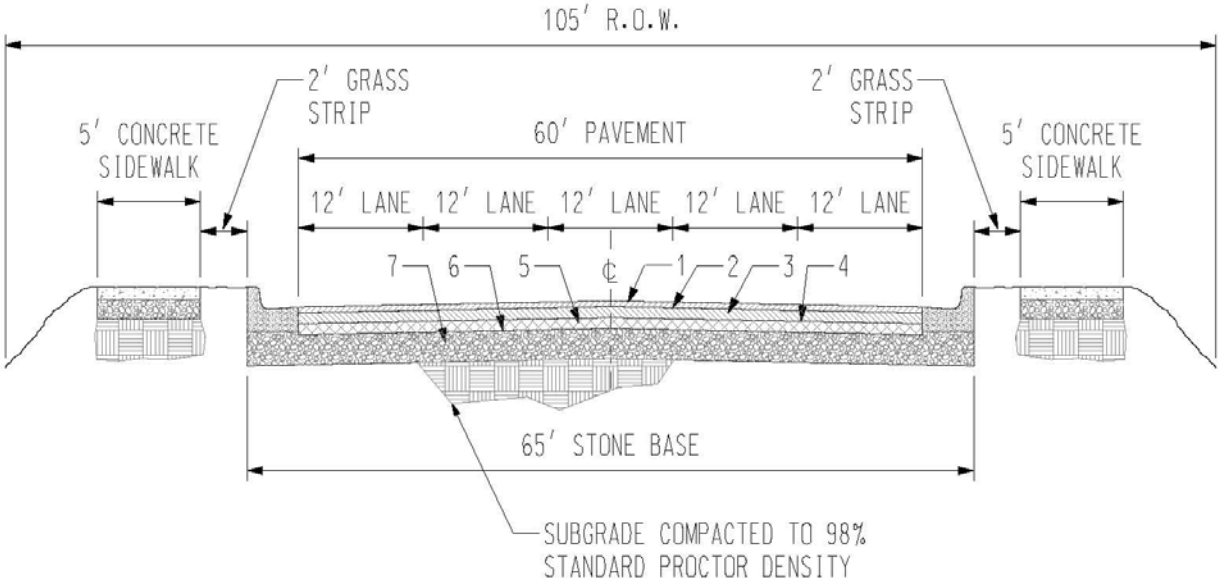

1. 1.5″ ASPHALTIC CONCRETE SURFACE (307-CW)
2. TACK COAT (403) 0.10 GAL/S.Y.
3. 3″ ASPHALTIC CONCRETE BASE (307-B MODIFIED)
4. TACK COAT (403) 0.10 GAL/S.Y.
5. 3″ ASPHALTIC CONCRETE BASE (307-A MIX)
6. PRIME COAT (402) 0.30 GAL/S.Y.
7. 8″ COMPACTED STONE BASE MINIMUM 97% STANDARD PROCTOR DENSITY (GRADING D PUG MILL MIX)

NOTES:

1. SIDEWALKS REQUIRED ON BOTH SIDES OF THE ROAD. (SEE SIDEWALK STANDARD DETAIL SHEET)
2. STANDARD CURB AND GUTTER (24″ GUTTER WIDTH AND 6″ CURB WIDTH).

TOWN OF SMYRNA TENNESSEE 1869

RESIDENTIAL ARTERIAL STREET (5-LANE) (105' R.O.W.)

REVISION:	0			
DATE:	5/02/2008			

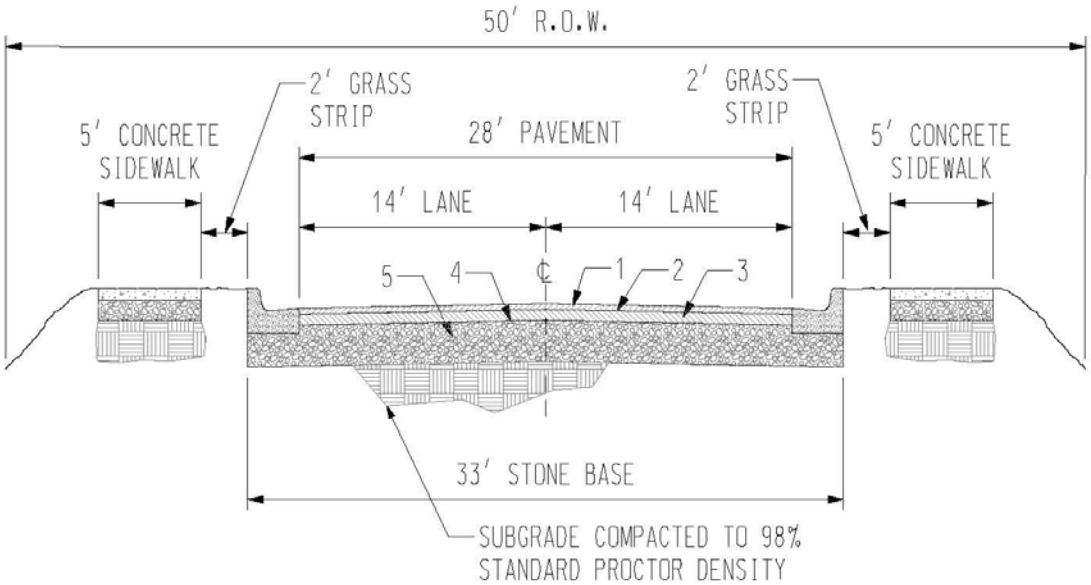

1. 1.5″ ASPHALTIC CONCRETE SURFACE (307-CW)
2. TACK COAT (403) 0.10 GAL/S.Y.
3. 3″ ASPHALTIC CONCRETE BASE (307-B MODIFIED)
4. PRIME COAT (402) 0.30 GAL/S.Y.
5. 8″ COMPACTED STONE BASE MINIMUM 97% STANDARD PROCTOR DENSITY (GRADING D PUG MILL MIX)

NOTES:

1. SIDEWALKS REQUIRED ON BOTH SIDES OF THE ROAD. (SEE SIDEWALK STANDARD DETAIL SHEET)
2. STANDARD CURB AND GUTTER (24″ GUTTER WIDTH AND 6″ CURB WIDTH).

TOWN OF SMYRNA TENNESSEE 1869

NON-RESIDENTIAL MINOR STREET (50' R.O.W.)

REVISION:	0			
DATE:	5/02/2008			

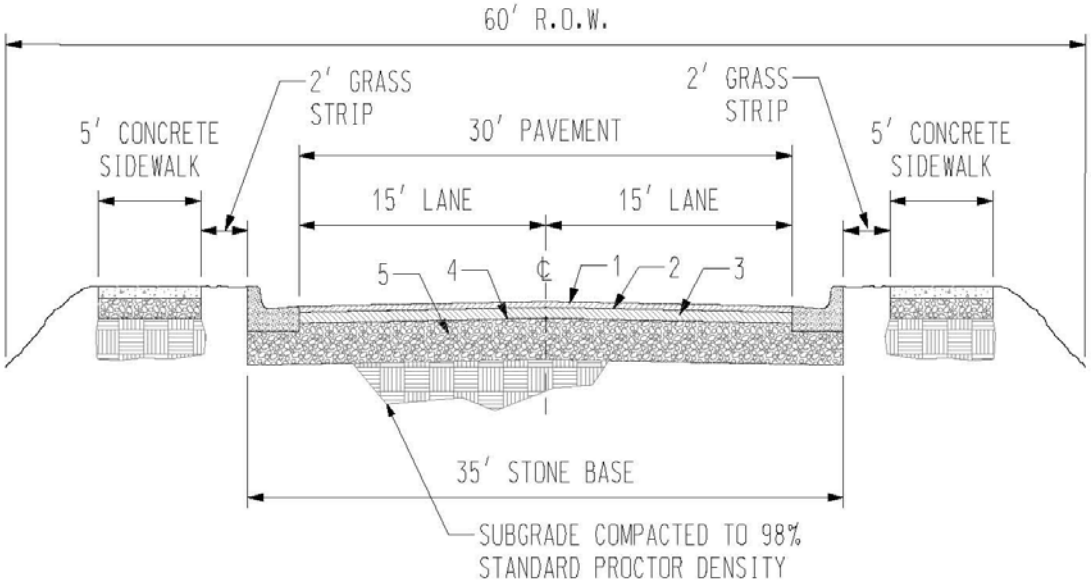

1. 1.5″ ASPHALTIC CONCRETE SURFACE (307-CW)
2. TACK COAT (403) 0.10 GAL/S.Y.
3. 3″ ASPHALTIC CONCRETE BASE (307-B MODIFIED)
4. PRIME COAT (402) 0.30 GAL/S.Y.
5. 8″ COMPACTED STONE BASE MINIMUM 97% STANDARD PROCTOR DENSITY (GRADING D PUG MILL MIX)

NOTES:

1. SIDEWALKS REQUIRED ON BOTH SIDES OF THE ROAD. (SEE SIDEWALK STANDARD DETAIL SHEET)
2. STANDARD CURB AND GUTTER (24″ GUTTER WIDTH AND 6″ CURB WIDTH).

NON-RESIDENTIAL COLLECTOR STREET (60' R.O.W.)

REVISION:	0			
DATE:	5/02/2008			

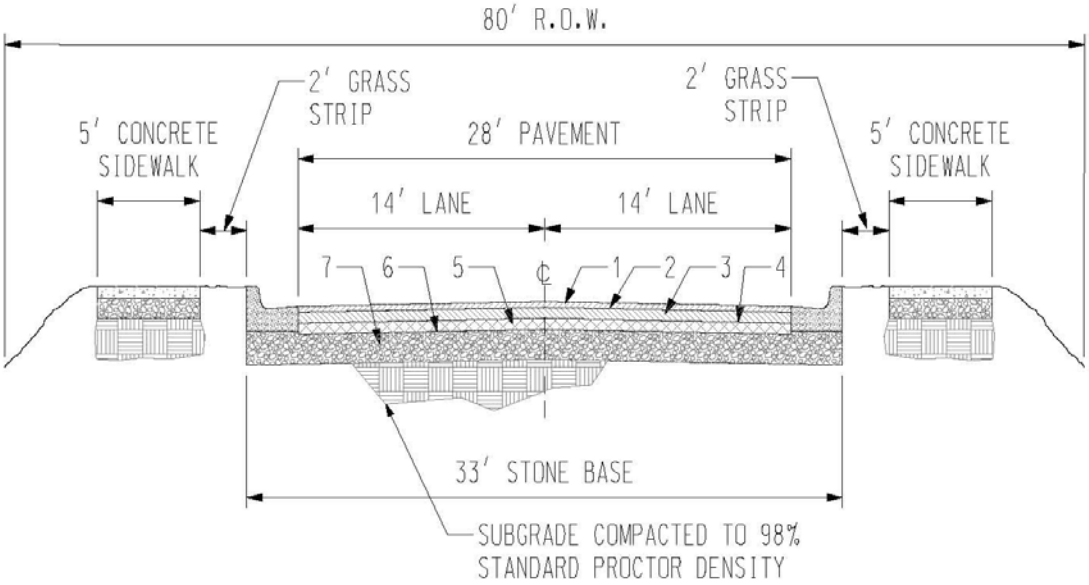

1. 1.5″ ASPHALTIC CONCRETE SURFACE (307-CW)
2. TACK COAT (403) 0.10 GAL/S.Y.
3. 3″ ASPHALTIC CONCRETE BASE (307-B MODIFIED)
4. TACK COAT (403) 0.10 GAL/S.Y.
5. 3″ ASPHALTIC CONCRETE BASE (307-A MIX)
6. PRIME COAT (402) 0.30 GAL/S.Y.
7. 10″ COMPACTED STONE BASE MINIMUM 97% STANDARD PROCTOR DENSITY (GRADING D PUG MILL MIX)

NOTES:

1. SIDEWALKS REQUIRED ON BOTH SIDES OF THE ROAD. (SEE SIDEWALK STANDARD DETAIL SHEET)
2. STANDARD CURB AND GUTTER (24″ GUTTER WIDTH AND 6″ CURB WIDTH).

TOWN OF SMYRNA TENNESSEE 1869

NON-RESIDENTIAL ARTERIAL STREET (2-LANE) (80' R.O.W.)

REVISION:	0			
DATE:	5/02/2008			

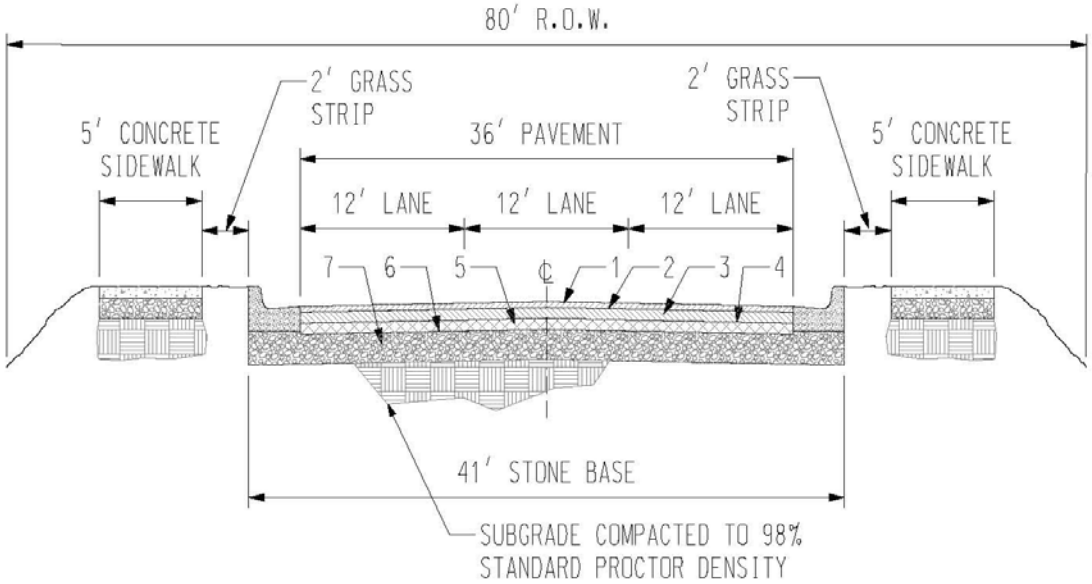

1. 1.5″ ASPHALTIC CONCRETE SURFACE (307-CW)
2. TACK COAT (403) 0.10 GAL/S.Y.
3. 3″ ASPHALTIC CONCRETE BASE (307-B MODIFIED)
4. TACK COAT (403) 0.10 GAL/S.Y.
5. 3″ ASPHALTIC CONCRETE BASE (307-A MIX)
6. PRIME COAT (402) 0.30 GAL/S.Y.
7. 10″ COMPACTED STONE BASE MINIMUM 97% STANDARD PROCTOR DENSITY (GRADING D PUG MILL MIX)

NOTES:

1. SIDEWALKS REQUIRED ON BOTH SIDES OF THE ROAD. (SEE SIDEWALK STANDARD DETAIL SHEET)
2. STANDARD CURB AND GUTTER (24″ GUTTER WIDTH AND 6″ CURB WIDTH).

TOWN OF SMYRNA TENNESSEE 1869

NON-RESIDENTIAL ARTERIAL STREET (3-LANE) (80' R.O.W.)

REVISION:	0			
DATE:	5/02/2008			

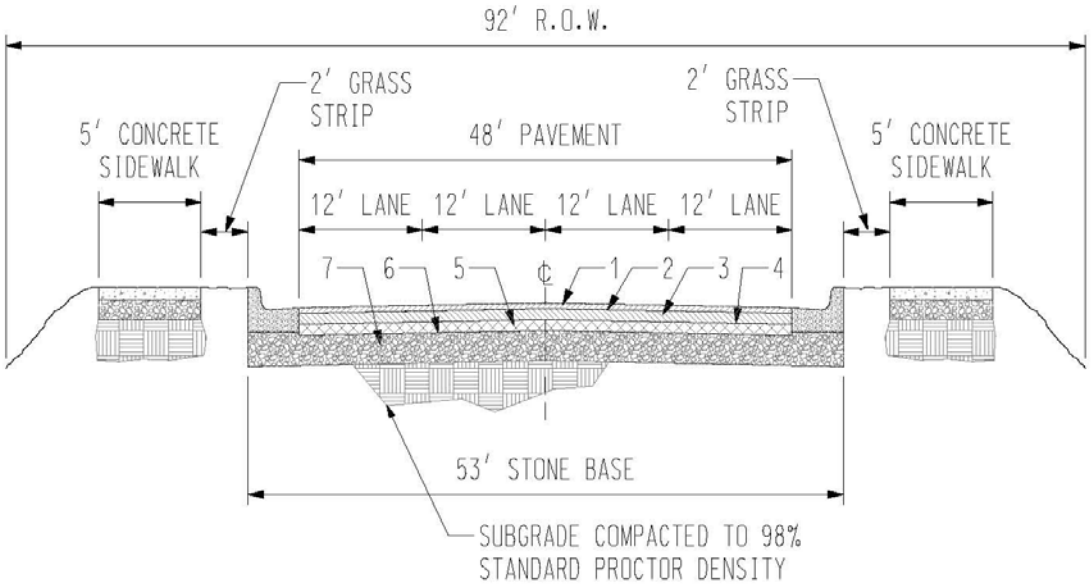

1. 1.5" ASPHALTIC CONCRETE SURFACE (307-CW)
2. TACK COAT (403) 0.10 GAL/S.Y.
3. 3" ASPHALTIC CONCRETE BASE (307-B MODIFIED)
4. TACK COAT (403) 0.10 GAL/S.Y.
5. 3" ASPHALTIC CONCRETE BASE (307-A MIX)
6. PRIME COAT (402) 0.30 GAL/S.Y.
7. 10" COMPACTED STONE BASE MINIMUM 97% STANDARD PROCTOR DENSITY (GRADING D PUG MILL MIX)

NOTES:

1. SIDEWALKS REQUIRED ON BOTH SIDES OF THE ROAD. (SEE SIDEWALK STANDARD DETAIL SHEET)
2. STANDARD CURB AND GUTTER (24" GUTTER WIDTH AND 6" CURB WIDTH).

TOWN OF SMYRNA TENNESSEE 1869

NON-RESIDENTIAL ARTERIAL STREET (4-LANE) (92' R.O.W.)

REVISION:	0			
DATE:	5/02/2008			

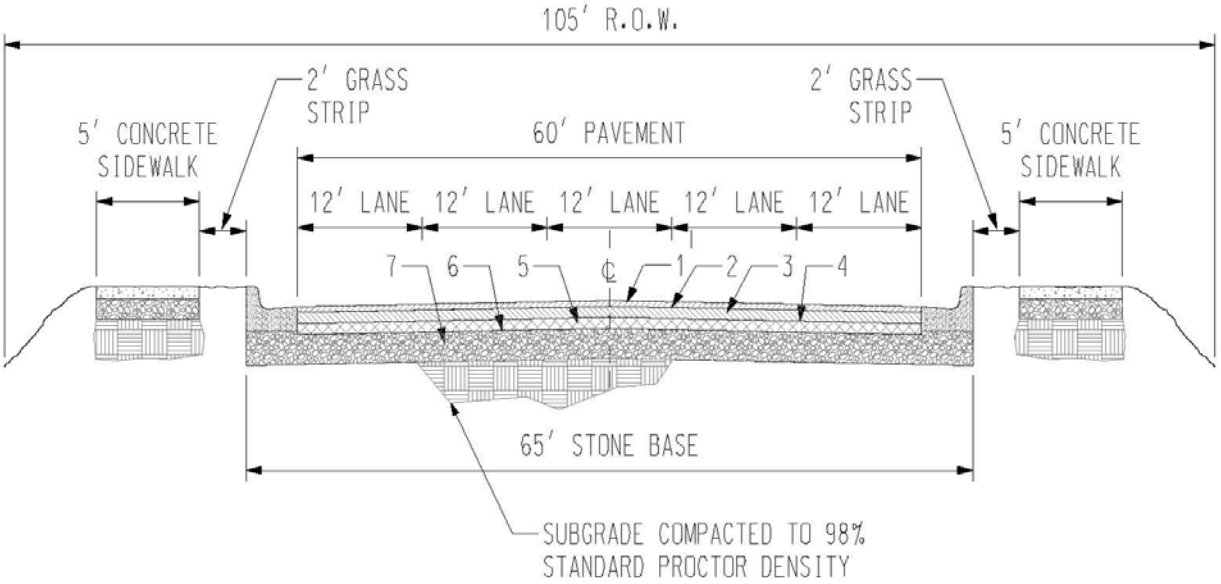

1. 1.5″ ASPHALTIC CONCRETE SURFACE (307-CW)
2. TACK COAT (403) 0.10 GAL/S.Y.
3. 3″ ASPHALTIC CONCRETE BASE (307-B MODIFIED)
4. TACK COAT (403) 0.10 GAL/S.Y.
5. 3″ ASPHALTIC CONCRETE BASE (307-A MIX)
6. PRIME COAT (402) 0.30 GAL/S.Y.
7. 10″ COMPACTED STONE BASE MINIMUM 97% STANDARD PROCTOR DENISTY (GRADING D PUG MILL MIX)

NOTES:

1. SIDEWALKS REQUIRED ON BOTH SIDES OF THE ROAD. (SEE SIDEWALK STANDARD DETAIL SHEET)
2. STANDARD CURB AND GUTTER (24″ GUTTER WIDTH AND 6″ CURB WIDTH).

TOWN OF SMYRNA TENNESSEE 1869

NON-RESIDENTIAL ARTERIAL STREET (5-LANE) (105' R.O.W.)

REVISION:	0			
DATE:	5/02/2008			

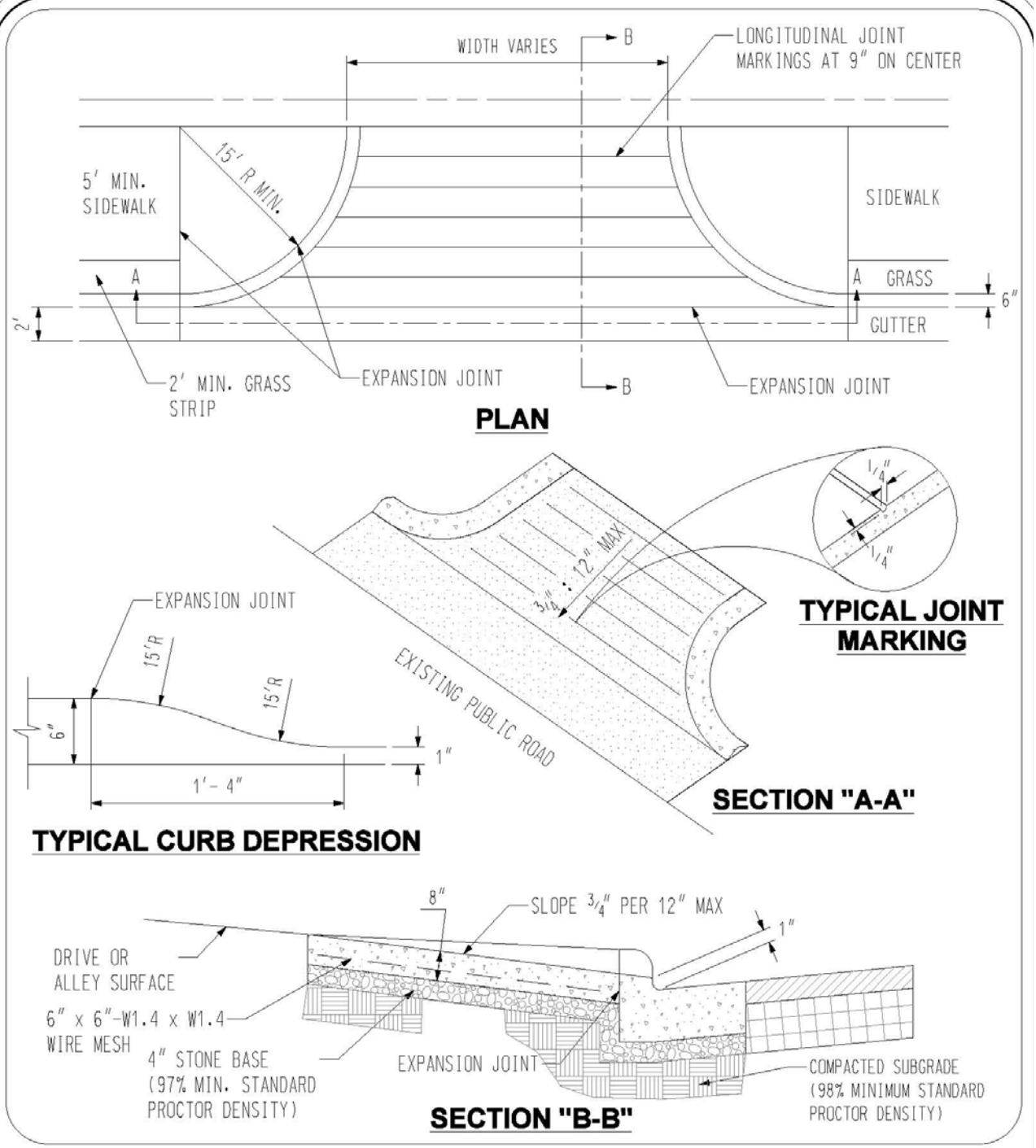
WIDTH VARIES
B
LONGITUDINAL JOINT MARKINGS AT 9" ON CENTER
15' R MIN.
5' MIN. SIDEWALK
SIDEWALK
A
A
GRASS
6"
2'
GUTTER
2' MIN. GRASS STRIP
EXPANSION JOINT
B
EXPANSION JOINT
PLAN
1/4"
1/4"
3/4" : 12" MAX
TYPICAL JOINT MARKING
EXPANSION JOINT
15'R
15'R
6"
1"
1'- 4"
EXISTING PUBLIC ROAD
SECTION "A-A"
TYPICAL CURB DEPRESSION
8"
SLOPE 3/4" PER 12" MAX
1"
DRIVE OR ALLEY SURFACE
6" x 6"-W1.4 x W1.4 WIRE MESH
4" STONE BASE (97% MIN. STANDARD PROCTOR DENSITY)
EXPANSION JOINT
COMPACTED SUBGRADE (98% MINIMUM STANDARD PROCTOR DENSITY)
SECTION "B-B"
TOWN OF SMYRNA
TENNESSEE
1869
NON-RESIDENTIAL DRIVEWAY RAMP (CONCRETE)
REVISION: 0
DATE: 5/02/2008

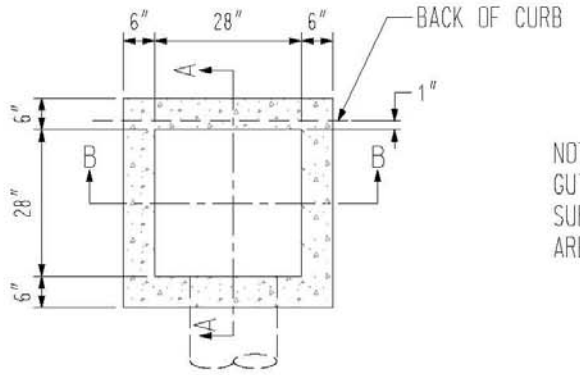

NOTE: CASTING FOR STANDARD CURB AND GUTTER SHOWN (DR-129). ACCEPTABLE SUBSTITUTES WHERE USE IS DIRECTED ARE DR-130, DR-132, DR-133.

PLAN

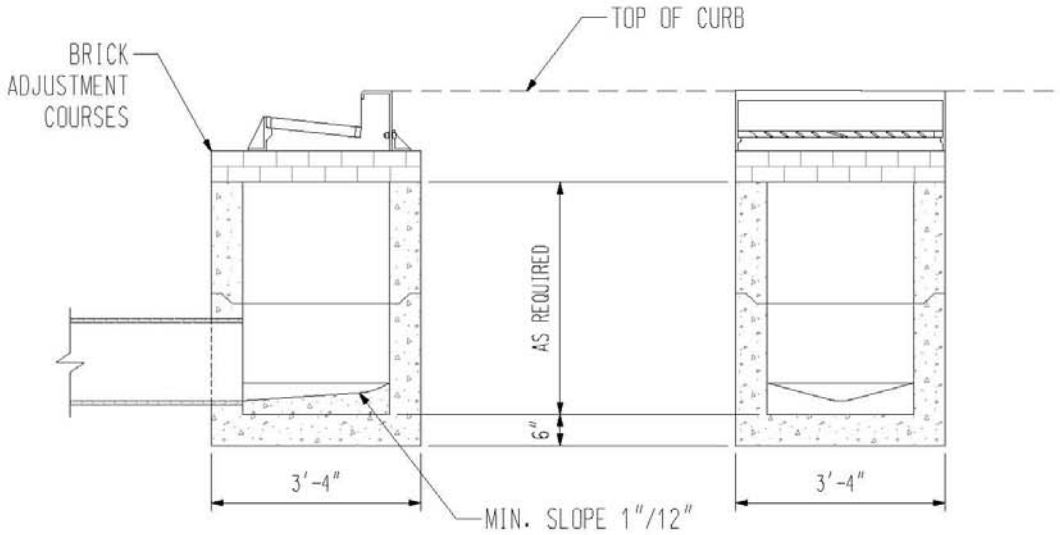

SECTION "A-A" **SECTION "B-B"**

CONCRETE: 4,000 PSI AT 28 DAYS
REINFORCED WITH NO. 4 GRADE 60 BARS

SINGLE INLET (PRECAST)

REVISION:	0			
DATE:	5/02/2008			

NOTES:

1. POURED-IN-PLACE CATCH BASINS ARE NOT ALLOWED UNLESS SPECIAL CONDITIONS EXIST WHICH PREVENTS A PRECAST STRUCTURE FROM BEING UTILIZED AND SHALL REQUIRE APPROVAL BY THE PUBLIC WORKS DEPARTMENT PRIOR TO INSTALLTION. IF APPROVED, THE POURED-IN-PLACE CATCH BASIN SHALL BE FORMED WITH STANDARD PLYWOOD FORMING MATERIALS UTILIZING NO. 4 REINFORCEMENT STEEL EVERY 6", 4,000 PSI CONCRETE, AND DIMENSIONS AS INDICATED BY THIS STANDARD DRAWING.

2. ADJUSTMENT COURSE BRICK, PIPE CONNECTION, AND CASTING CONNECTION SHALL BE SEALED ENTIRELY WITH NON-SHRINK GROUT.

3. ROCKS, WOOD, AND OTHER FOREIGN MATERIAL SHALL NOT BE ALLOWED FOR PIPE CONNECTION OR CASTING CONNECTION AND ADJUSTMENTS.

4. ALIGNMENT AND SETTING OF THE CASTING SHALL BE AS INDICATED ON THIS DRAWING AND SHALL BE PLACED ON THE PRECAST STRUCTURE WITH NO NON-BEARING GAPS ALLOWED.

5. CASTING CURB BACK TO INCLUDE "NO DUMPING DRAINS TO RIVER" TEXT AND SHALL BE CAST AS PART OF THE CASTING.

6. ALL STRUCTURES LOCATED IN ROADWAYS SHALL BE BACKFILLED FULL DEPTH WITH TDOT #67 STONE. THE STRUCTURE SHALL SET ON A MINIMUM 6" THICK STONE BEDDING (TDOT #67 STONE).

TOWN OF SMYRNA TENNESSEE 1869

SINGLE INLET (PRECAST) NOTES

REVISION:	0			
DATE:	5/02/2008			

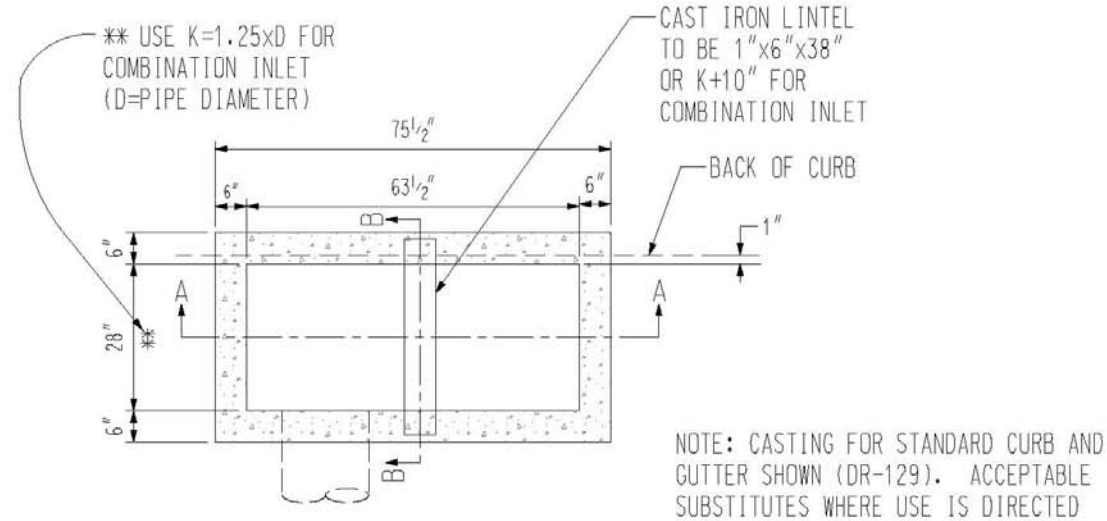

NOTE: CASTING FOR STANDARD CURB AND GUTTER SHOWN (DR-129). ACCEPTABLE SUBSTITUTES WHERE USE IS DIRECTED ARE DR-130 AND DR-132.

PLAN

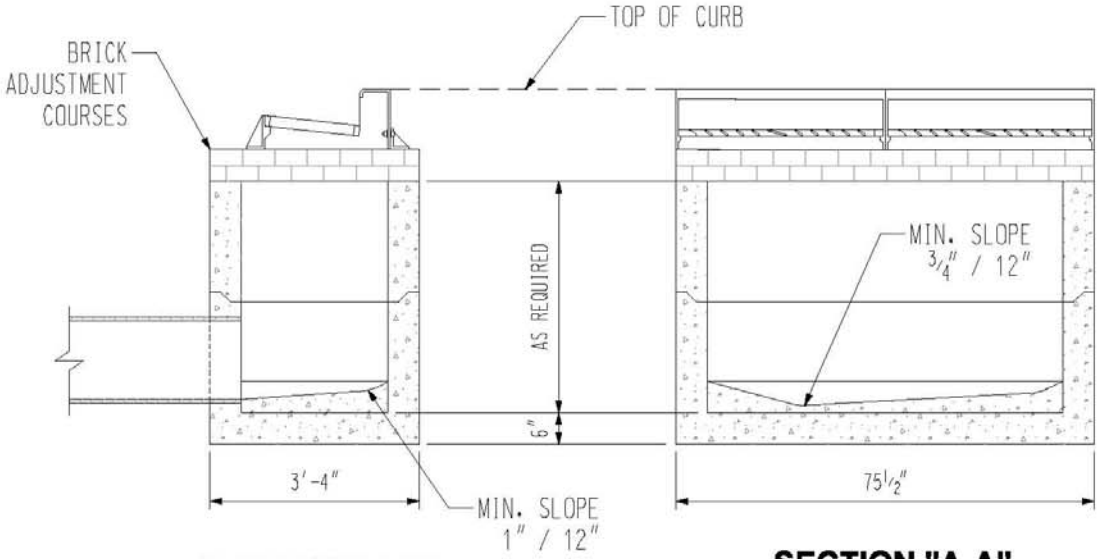

SECTION "B-B"

SECTION "A-A"

CONCRETE: 4,000 PSI AT 28 DAYS
REINFORCED WITH NO. 4 GRADE 60 BARS

DOUBLE INLET (PRECAST)

REVISION:	0			
DATE:	5/02/2008			

NOTES:

1. POURED-IN-PLACE CATCH BASINS ARE NOT ALLOWED UNLESS SPECIAL CONDITIONS EXIST WHICH PREVENTS A PRECAST STRUCTURE FROM BEING UTILIZED AND SHALL REQUIRE APPROVAL BY THE PUBLIC WORKS DEPARTMENT PRIOR TO INSTALLTION. IF APPROVED, THE POURED-IN-PLACE CATCH BASIN SHALL BE FORMED WITH STANDARD PLYWOOD FORMING MATERIALS UTILIZING NO. 4 REINFORCEMENT STEEL EVERY 6", 4,000 PSI CONCRETE, AND DIMENSIONS AS INDICATED BY THIS STANDARD DRAWING.

2. ADJUSTMENT COURSE BRICK, PIPE CONNECTION, AND CASTING CONNECTION SHALL BE SEALED ENTIRELY WITH NON-SHRINK GROUT.

3. ROCKS, WOOD, AND OTHER FOREIGN MATERIAL SHALL NOT BE ALLOWED FOR PIPE CONNECTION OR CASTING CONNECTION AND ADJUSTMENTS.

4. ALIGNMENT AND SETTING OF THE CASTING SHALL BE AS INDICATED ON THIS DRAWING AND SHALL BE PLACED ON THE PRECAST STRUCTURE WITH NO NON-BEARING GAPS ALLOWED.

5. CASTING CURB BACK TO INCLUDE "NO DUMPING DRAINS TO RIVER" TEXT AND SHALL BE CAST AS PART OF THE CASTING.

6. ALL STRUCTURES LOCATED IN ROADWAYS SHALL BE BACKFILLED FULL DEPTH WITH TDOT #67 STONE. THE STRUCTURE SHALL SET ON A MINIMUM 6" THICK STONE BEDDING (TDOT #67 STONE).

TOWN OF SMYRNA TENNESSEE 1869

DOUBLE INLET (PRECAST) NOTES

REVISION:	0			
DATE:	5/02/2008			

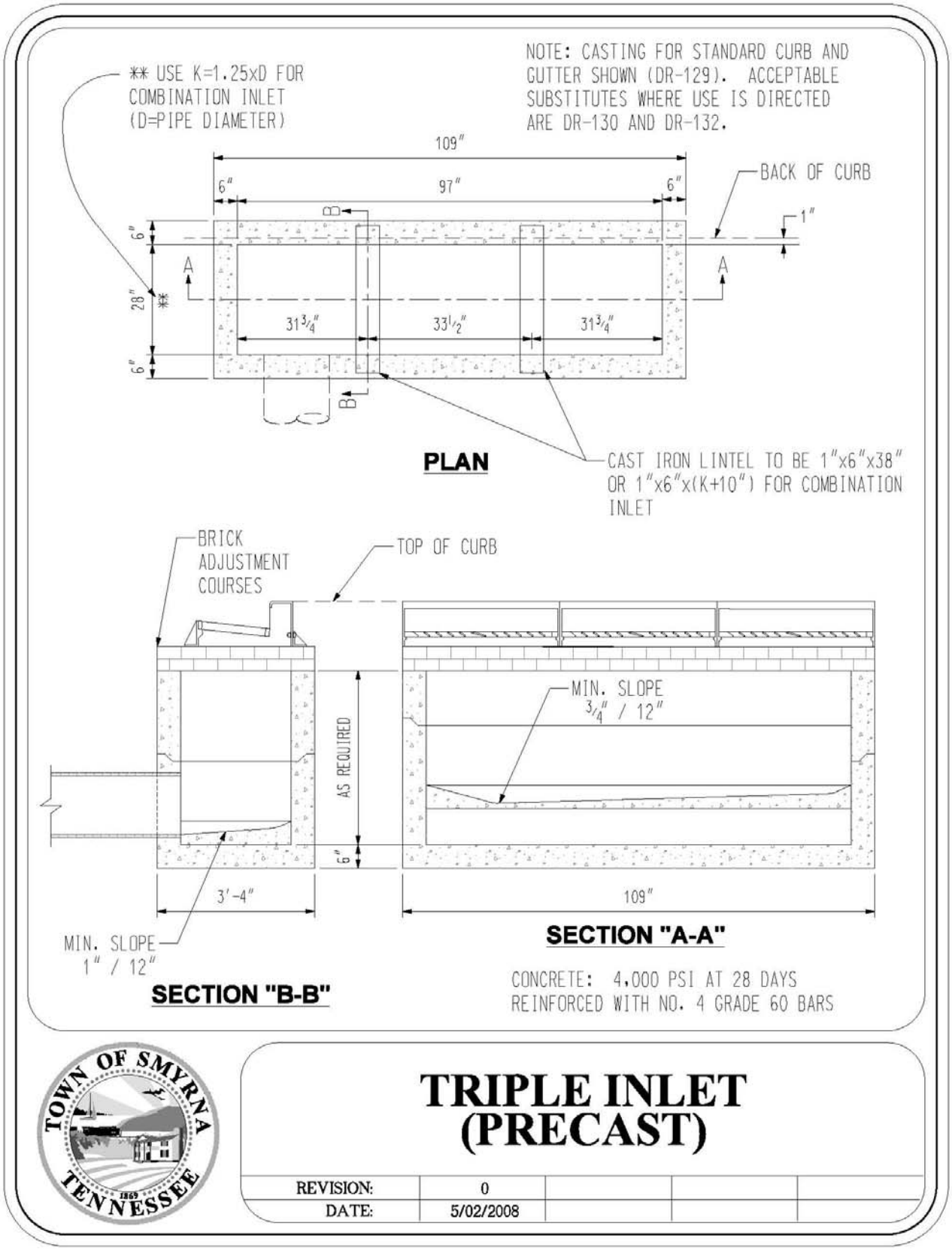
** USE K=1.25xD FOR COMBINATION INLET (D=PIPE DIAMETER)
NOTE: CASTING FOR STANDARD CURB AND GUTTER SHOWN (DR-129). ACCEPTABLE SUBSTITUTES WHERE USE IS DIRECTED ARE DR-130 AND DR-132.
109"
6"
97"
6"
BACK OF CURB
1"
6"
28"
**
6"
A
A
B
B
31 3/4"
33 1/2"
31 3/4"
PLAN
CAST IRON LINTEL TO BE 1"x6"x38" OR 1"x6"x(K+10") FOR COMBINATION INLET
BRICK ADJUSTMENT COURSES
TOP OF CURB
AS REQUIRED
6"
3'-4"
MIN. SLOPE 1" / 12"
SECTION "B-B"
MIN. SLOPE 3/4" / 12"
109"
SECTION "A-A"
CONCRETE: 4,000 PSI AT 28 DAYS
REINFORCED WITH NO. 4 GRADE 60 BARS
TOWN OF SMYRNA
TENNESSEE
1869
TRIPLE INLET (PRECAST)
REVISION: 0
DATE: 5/02/2008

NOTES:

1. POURED-IN-PLACE CATCH BASINS ARE NOT ALLOWED UNLESS SPECIAL CONDITIONS EXIST WHICH PREVENTS A PRECAST STRUCTURE FROM BEING UTILIZED AND SHALL REQUIRE APPROVAL BY THE PUBLIC WORKS DEPARTMENT PRIOR TO INSTALLTION. IF APPROVED, THE POURED-IN-PLACE CATCH BASIN SHALL BE FORMED WITH STANDARD PLYWOOD FORMING MATERIALS UTILIZING NO. 4 REINFORCEMENT STEEL EVERY 6", 4,000 PSI CONCRETE, AND DIMENSIONS AS INDICATED BY THIS STANDARD DRAWING.

2. ADJUSTMENT COURSE BRICK, PIPE CONNECTION, AND CASTING CONNECTION SHALL BE SEALED ENTIRELY WITH NON-SHRINK GROUT.

3. ROCKS, WOOD, AND OTHER FOREIGN MATERIAL SHALL NOT BE ALLOWED FOR PIPE CONNECTION OR CASTING CONNECTION AND ADJUSTMENTS.

4. ALIGNMENT AND SETTING OF THE CASTING SHALL BE AS INDICATED ON THIS DRAWING AND SHALL BE PLACED ON THE PRECAST STRUCTURE WITH NO NON-BEARING GAPS ALLOWED.

5. CASTING CURB BACK TO INCLUDE "NO DUMPING DRAINS TO RIVER" TEXT AND SHALL BE CAST AS PART OF THE CASTING.

6. ALL STRUCTURES LOCATED IN ROADWAYS SHALL BE BACKFILLED FULL DEPTH WITH TDOT #67 STONE. THE STRUCTURE SHALL SET ON A MINIMUM 6" THICK STONE BEDDING (TDOT #67 STONE).

TOWN OF SMYRNA TENNESSEE 1869

TRIPLE INLET (PRECAST) NOTES

REVISION:	0			
DATE:	5/02/2008			

CONCRETE: 4,000 PSI
AT 28 DAYS REINFORCED
WITH NO. 4 GRADE 60 BARS

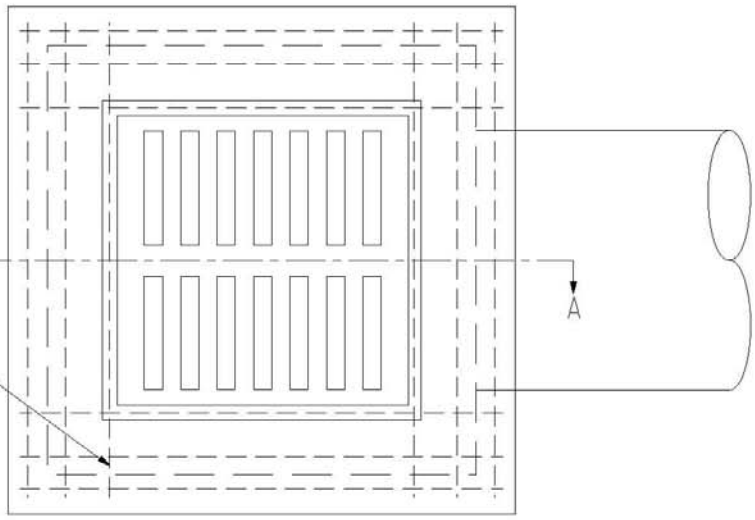

PLAN

NOTES

1. FRAME AND GRATE SHOWN ARE FOR FLUSH MOUNTED INLET (DR-132). ACCEPTABLE SUBSTITUTES WHERE USE IS DIRECTED ARE DR-129, DR-130, DR-133, AND DR-134 AND DR-135 WITH REFORMING OF CONCRETE SLAB FOR FRAME INSTALLATION

2. FOR DOUBLE AND TRIPLE INLETS SEE DR-110 AND DR-115.

3. COMBINATION INLETS ARE NOT ALLOWED FOR INSTALLATION WITHN PUBLIC ROADWAYS.

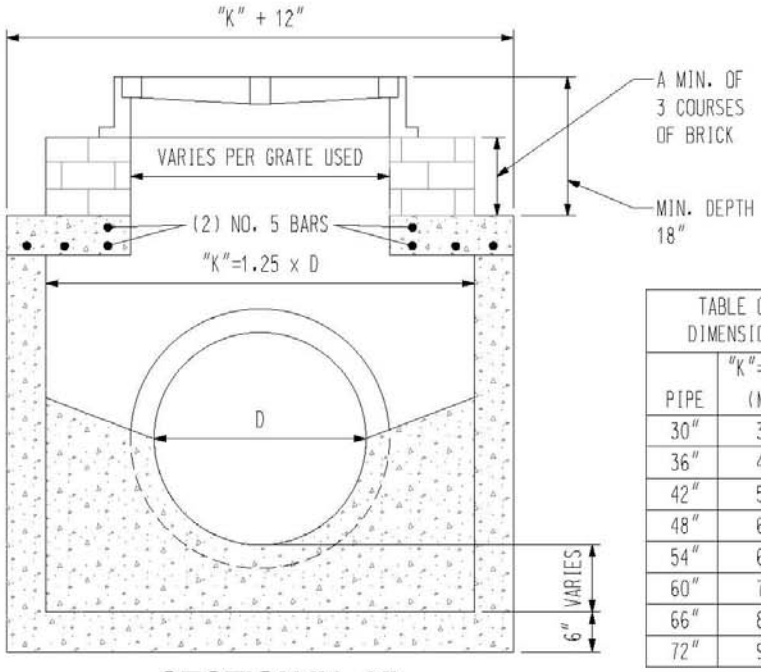

SECTION "A-A"

TABLE OF DIMENSIONS	
PIPE	"K"=1.25D (MIN)
30"	38"
36"	45"
42"	53"
48"	60"
54"	68"
60"	75"
66"	83"
72"	90"

COMBINATION INLET (PRECAST)

REVISION:	0			
DATE:	5/02/2008			

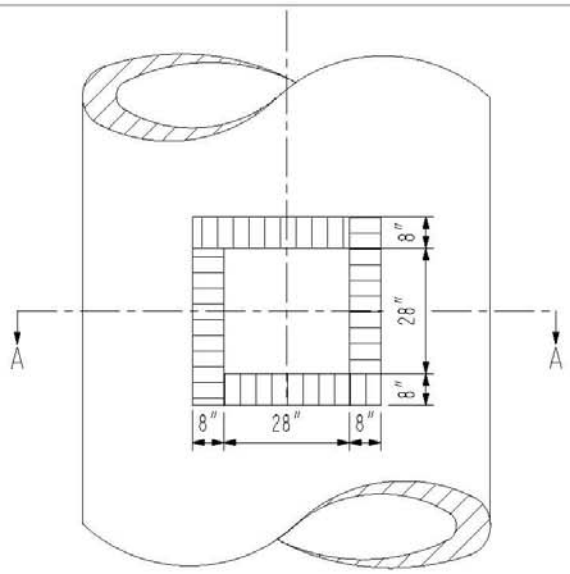

PLAN

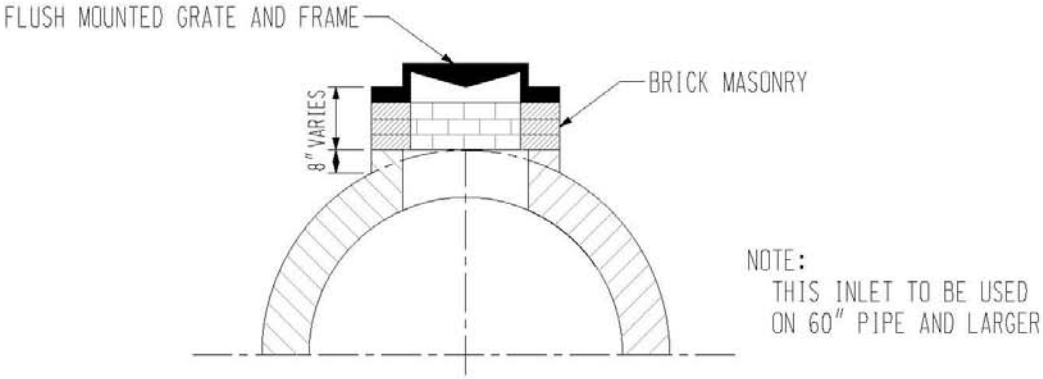

SECTION "A-A"

NOTES:

1. FRAME AND GRATE SHOWN ARE FOR FLUSH MOUNTED INLET (DR-132). ACCEPTABLE SUBSTITUTES WHERE USE IS DIRECTED ARE DR-129, DR-130, DR-133, AND DR-134 AND DR-135 WITH REFORMING OF CONCRETE SLAB FOR FRAME INSTALLATION.

2. TYPE I INLETS TO BE INSTALLED ON RCP ONLY. INSTALLTION ON OTHER TYPES OF PIPE MATERIALS IS NOT ALLOWED.

TYPE I INLET

REVISION:	0			
DATE:	5/02/2008			

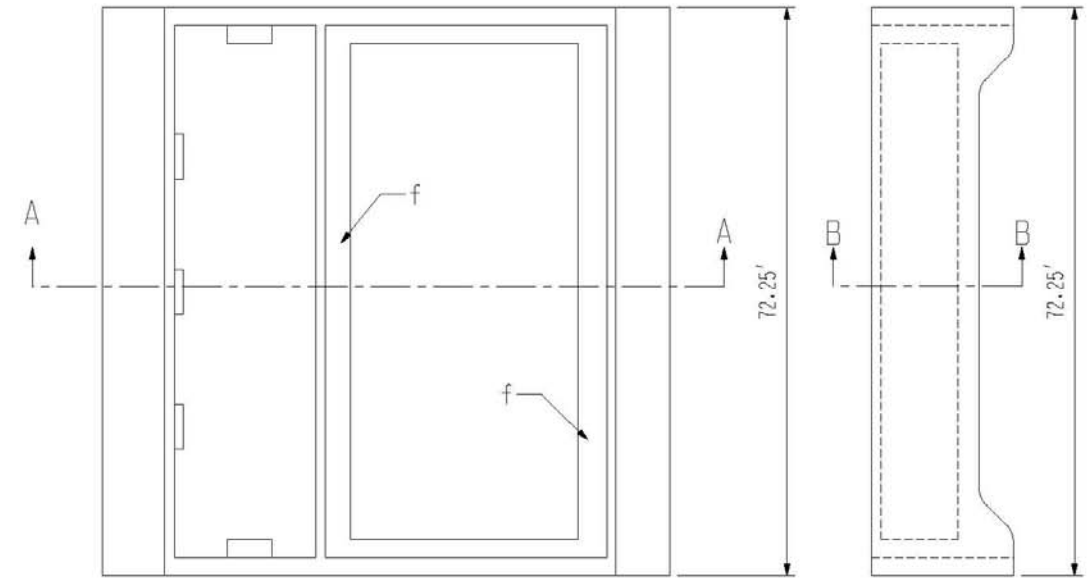

TOP VIEW

TOP VIEW

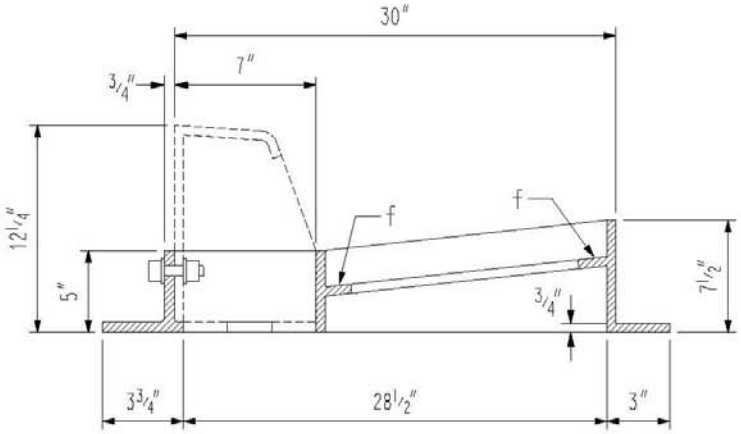

SECTION "A-A"

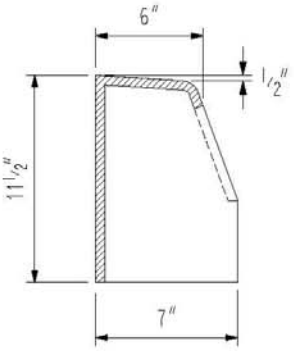

SECTION "B-B"

NOTES:

1. CONTACT SURFACES OF FRAME MARKED "f" ARE TO BE GROUND.
2. FRAME TO BE SIZED FOR MOUNTING EITHER VANE OR SUMP TYPE GRATE (DR-131) WITHIN FRAME DIMENSIONS SHOWN.
3. CASTING CURB BACK TO INCLUDE "NO DUMPING DRAINS TO RIVER" TEXT AND SHALL BE CAST AS PART OF THE CASTING.

TOWN OF SMYRNA TENNESSEE 1869

FRAME AND GRATE FOR VERTICAL CURB WITH GUTTER

REVISION:	0			
DATE:	5/02/2008			

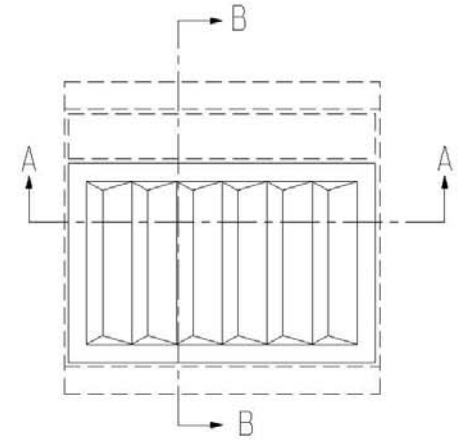

VANE GRATE TOP VIEW

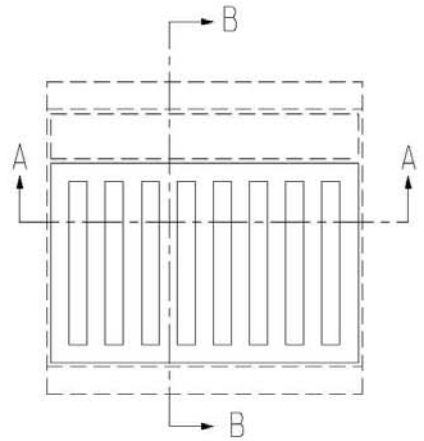

SUMP GRATE TOP VIEW

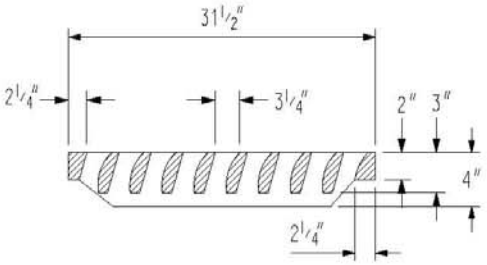

SECTION "A-A"

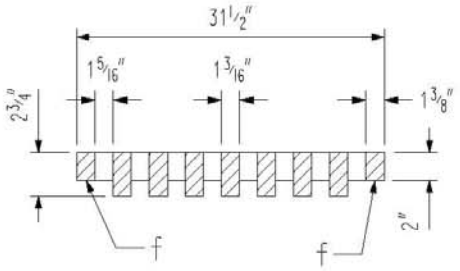

SECTION "A-A"

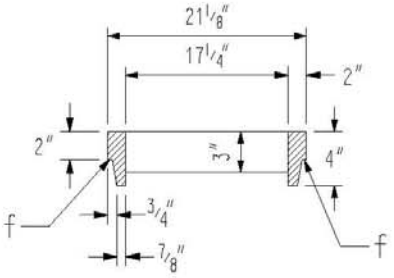

SECTION "B-B"

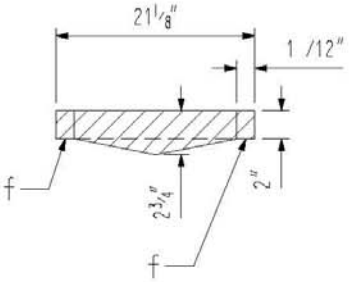

SECTION "B-B"

NOTES:
1. CONTACT SURFACES OF FRAME MARKED "F" ARE TO BE GROUND.
2. VANE AND SUMP GRATES TO BE JOHN BOUCHARD & SONS OR AN APPROVED EQUAL.

VANE AND SUMP GRATES

REVISION:	0			
DATE:	5/02/2008			

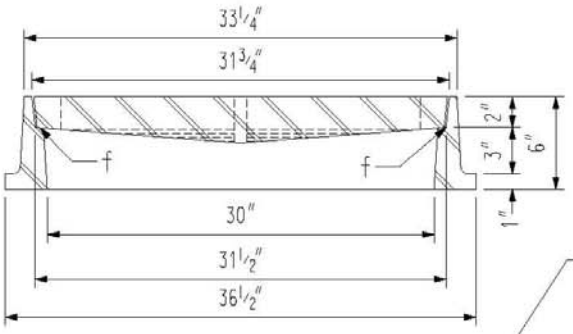

SECTION "A-A"

TOTAL AREA OF ALL OPENINGS = 2.94 SQUARE FEET

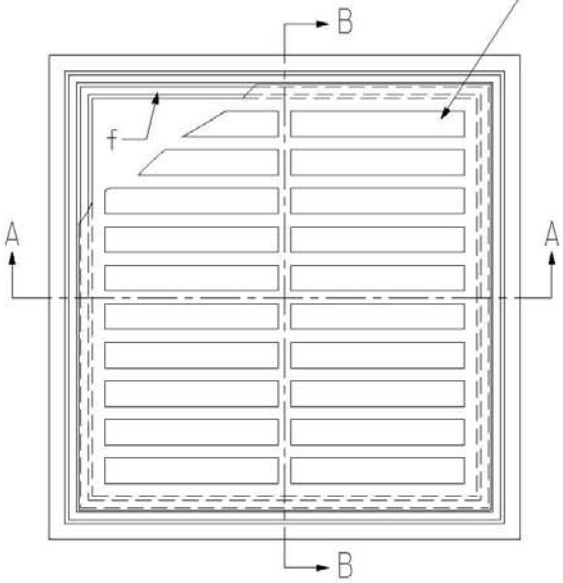

PLAN

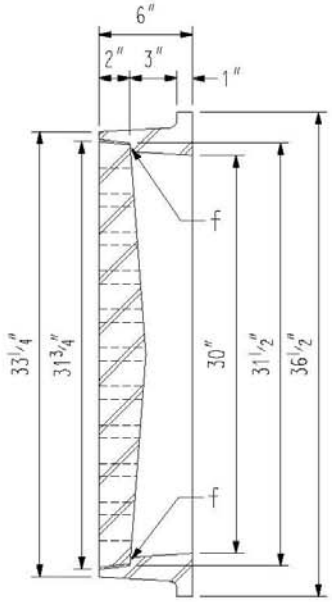

SECTION "B-B"

NOTES:

1. OMIT BASE FLANGE ON ONE SIDE OF FRAME FOR DOUBLE INSTALLATIONS AND END FRAMES OF OTHER MULTIPLE INSTALLATIONS. OMIT ON (2) TWO SIDES (OPPOSITE) FOR CENTER UNITS OF MULTIPLE INSTALLATIONS. FOR INSTALLATION WITH CURB INLETS, OMIT BASE ON ONE SIDE OF SINGLE, TWO ADJACENT SIDES OF DOUBLE, AND THREE SIDES OF CENTER UNITS OF OTHER MULTIPLE INSTALLATIONS.
2. CONTACT SURFACES OF FRAME AND GRATE MARKED "f" ARE TO BE GROUND.

TOWN OF SMYRNA TENNESSEE 1869

FRAME AND GRATE FOR FLUSH MOUNTED INLETS

REVISION:	0			
DATE:	5/02/2008			

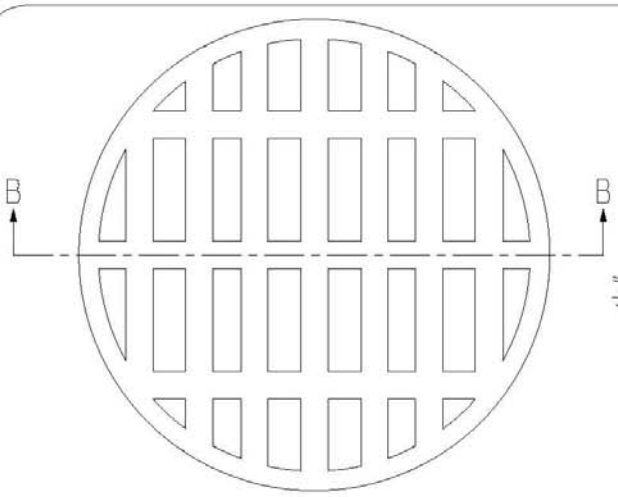

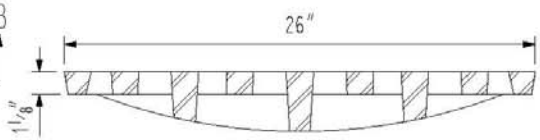

SECTION "B-B"

GRATE TYPE
TOP VIEW

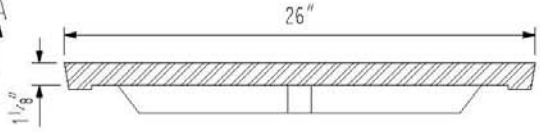

SECTION "A-A"

SOLID LID
TOP VIEW

NOTES:

1. GRATE TYPE LID TO BE JOHN BOUCHARD & SONS LID 2155 OR AN APPROVED EQUAL.
2. SOLID TYPE LID TO BE JOHN BOUCHARD & SONS LID 1155 WITH TEXT "STORM DRAIN" CAST AS PART OF THE CASTING OR AN APPROVED EQUAL.

TOWN OF SMYRNA TENNESSEE 1869

ROUND MANHOLE COVERS (GRATE & SOLID TYPE)

REVISION:	0			
DATE:	5/02/2008			

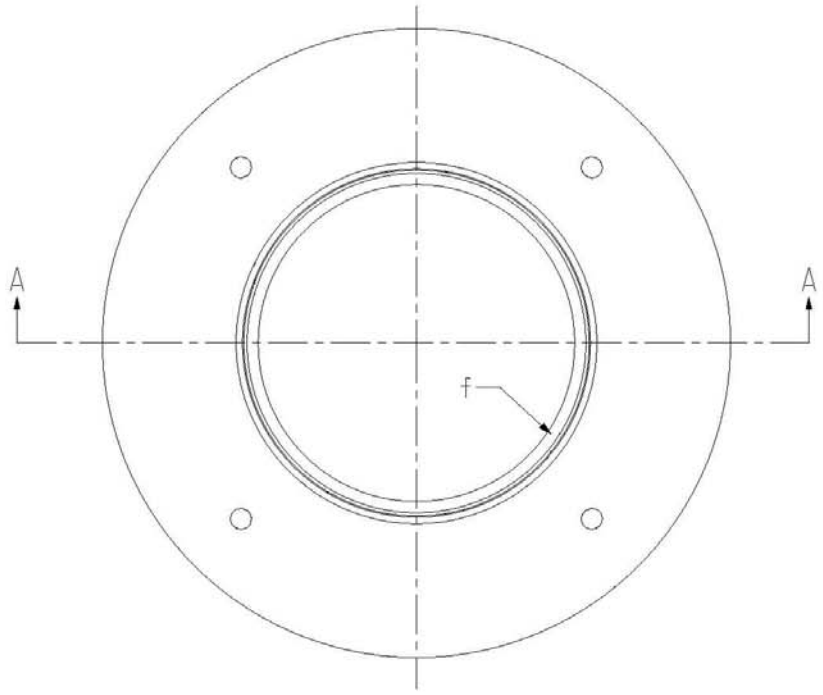

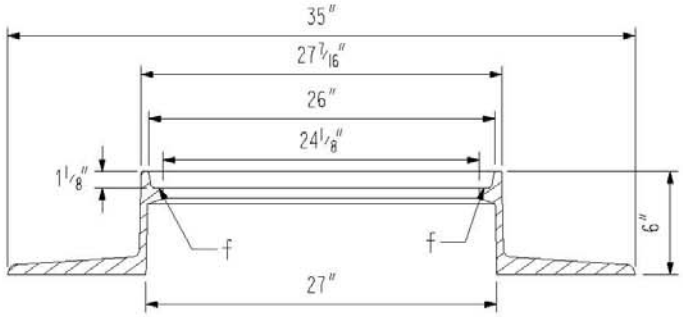

NOTES:
1. CONTACT SURFACE OF FRAME MARKED "f" IS TO BE MACHINED.
2. FRAMES TO BE JOHN BOUCHARD & SONS FRAME 1155/2155 OR AN APPROVED EQUAL.
3. SEE DETAIL SHEET "ROUND MANHOLE COVERS" FOR REFERENCE OF MANHOLE COVERS AND GRATES.

TOWN OF SMYRNA TENNESSEE 1869

ROUND MANHOLE FRAME

REVISION:	0			
DATE:	5/02/2008			

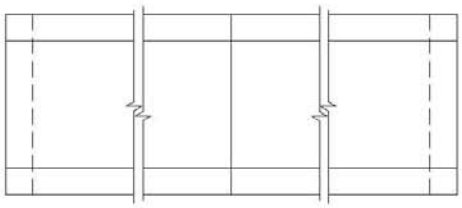

PLAN

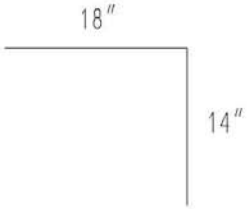

NO. 4 TIE BARS AT 6" O.C.

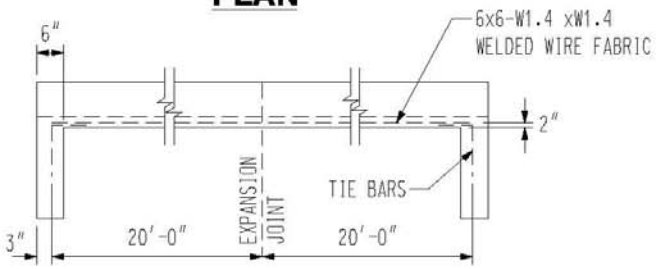

ELEVATION

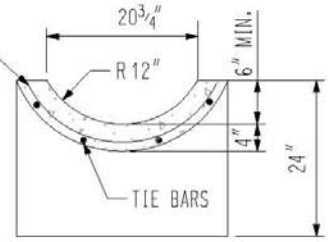

SECTION "A-A"

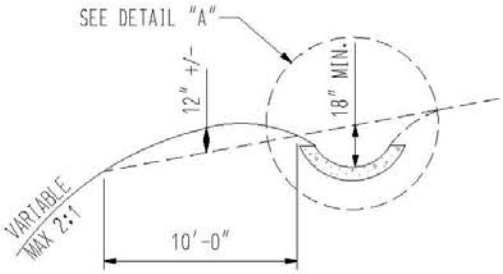

TYPICAL PAVED DITCH

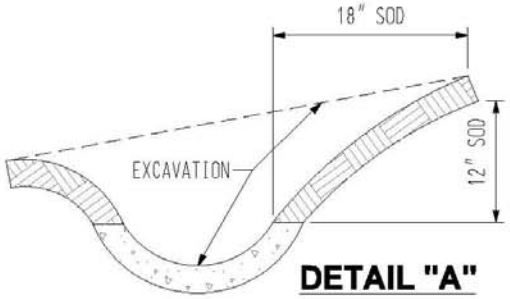

DETAIL "A"

NOTES:

1. COMPACTION, FINISHING, AND CURING SHALL BE THE SAME AS REQUIRED FOR CONCRETE SIDEWALK WITH 4" STONE BASE.
2. IF CONTRACTOR ELECTS TO USE A CONSTRUCTION JOINT IN THE POURING OF THE PAVED DITCH, IT SHALL BE CONSTRUCTED AS DETAILED.
3. ANY LENGTH OF LONGITUDINAL REINFORCING STEEL WILL BE PERMITTED PROVIDED A 12" LAP IS USED IN THE SPLICE. ADEQUATE TIES AT THE SPLICE SHALL BE REQUIRED.
4. EXPANSION JOINTS REQUIRED ON 20' CENTERS.
5. SHOULD THE TERRAIN OF EXISTING GROUND BE SO THAT WATER WOULD DRAIN INTO THE DITCH FROM BOTH SIDES, THEN SODDING WILL BE REQUIRED ON BOTH SIDES OF THE DITCH.

TOWN OF SMYRNA TENNESSEE 1869

DITCH DETAIL (SMALL SECTION)

REVISION:	0			
DATE:	5/02/2008			

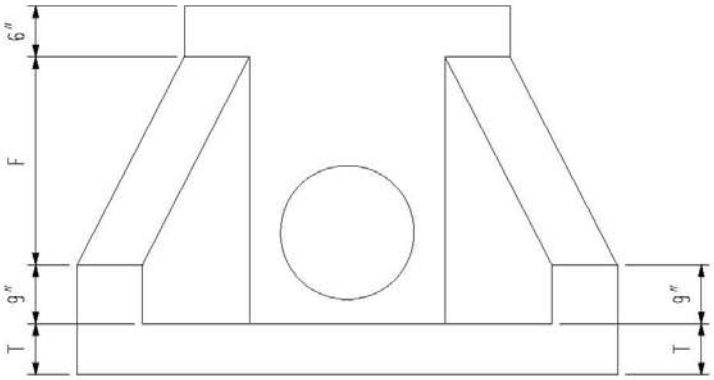

FRONT VIEW

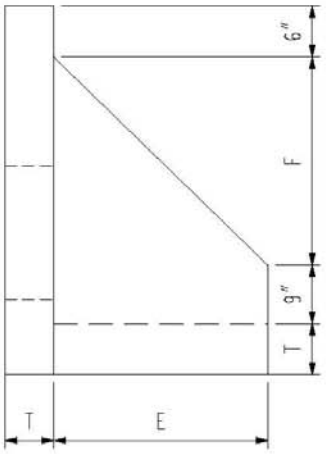

SIDE VIEW

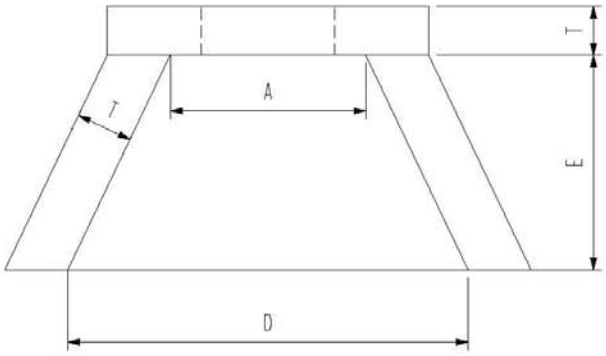

TOP VIEW

TABLE OF DIMENSIONS					
PIPE SIZES	A	D	E	F	T (MIN.)
15"	2'-6"	5'-0"	2'-6"	1'-9"	6"
18"	2'-6"	5'-0"	2'-6"	1'-9"	6"
21"	2'-6"	5'-0"	2'-6"	1'-9"	6"
24"	4'-0"	6'-6"	4'-0"	3'-3"	6"
30"	4'-0"	6'-6"	4'-0"	3'-3"	6"
36"	5'-6"	8'-0"	3'-6"	4'-5"	6"
42"	5'-6"	8'-0"	3'-6"	4'-5"	6"
48"	5'-6"	8'-0"	3'-6"	4'-5"	6"
54"	7'-0"	9'-5"	4'-6"	5'-9"	6"
60"	7'-0"	9'-5"	4'-6"	5'-9"	6"
66"	8'-6"	11'-0"	5'-6"	6'-11"	6"
72"	8'-6"	11'-0"	5'-6"	6'-11"	6"

NOTES:

1. CONCRETE: 4,000 PSI AT 28 DAYS REINFORCED WITH NO. 4 BARS 10" C/C EACH WAY WITH WINGS AND TOE SLAB DOWELED TO HEADWALL WITH NO. 5 BARS.
2. 3/4" CHAMFER ON ALL EXPOSED EDGES.

TOWN OF SMYRNA TENNESSEE 1869

CONCRETE HEADWALL

REVISION:	0			
DATE:	5/02/2008			

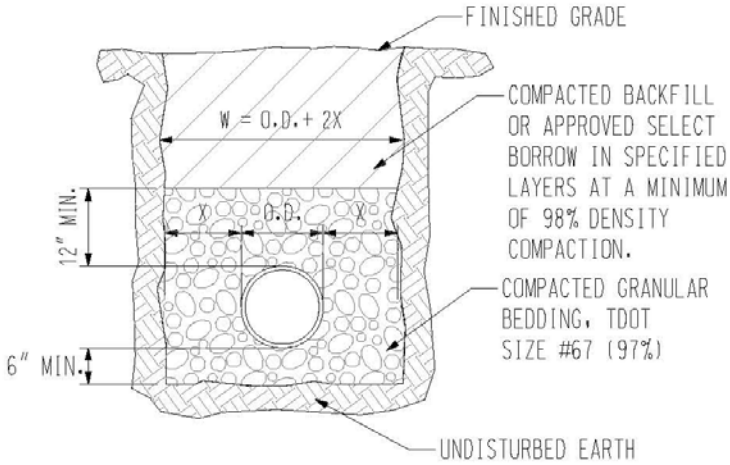

STANDARD TRENCH

TABLE 3

PIPE SIZE	X
12" & SMALLER	**
12" - 30"	12"
33" - 42"	15"
48" & LARGER	18"

**TRENCH WIDTH (W) SHALL BE 3'-0" MAX. WIDTH OF TRENCH (W)=O.D. + 2X WHERE X IS DISTANCE FROM OUTSIDE OF PIPE TO EDGE OF TRENCH.

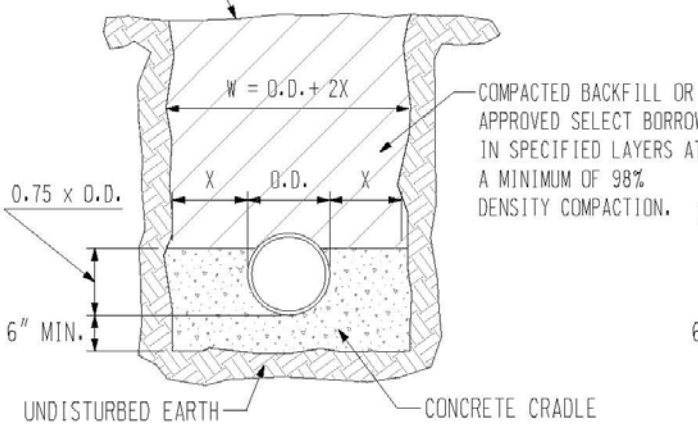

CONCRETE CRADLE

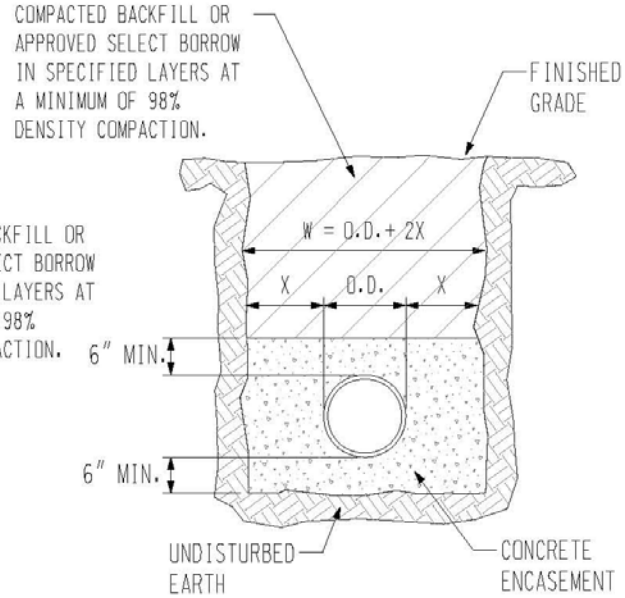

CONCRETE ENCASEMENT

TRENCH BACKFILL

REVISION:	0			
DATE:	5/02/2008			

NOTES:

1. CONCRETE FOR CRADLES AND ENCASEMENTS TO HAVE f'c=3,000 PSI AT 28 DAYS.

2. POUR CONCRETE AGAINST UNDISTURBED EARTH.

3. FOR CONTINUOUS CONDUIT IN TRENCH CONDITIONS THE WIDTH OF TRENCH (W) SHALL BE O.D.+2X MAX.

4. THE WIDTH OF TRENCH FOR ALL OTHER PIPE DIAMETERS SHALL BE ACCORDING TO TABLE 3.

5. BACKFILL IN NEW AND EXISTING ROADWAYS SHALL BE FULL TRENCH DEPTH GRADING D PUG MILL MIX COMPACTED (MINIMUM 97% STANDARD PROCTOR DENSITY) IN 8" LAYERS UP TO THE BOTTOM OF THE PAVEMENT SECTION.

6. AN ALTERNATE BACKFILL SHALL CONSIST OF STONE BEDDING AND COVER AS INDICATED IN THE STANDARD "TRENCH BACKFILL" DETAIL WITH SUITABLE BACKFILL MATERIAL COMPACTED TO 98% DENSITY. THE SUITABLE BACKFILL MATERIAL SHALL BE APPROVED BY THE PUBLIC WORKS DIRECTOR OR HIS DESIGNEE AND SHALL BE PLACED IN 8" COMPACTED LIFTS.

TOWN OF SMYRNA TENNESSEE 1869

TRENCH BACKFILL NOTES

REVISION:	0			
DATE:	5/02/2008			

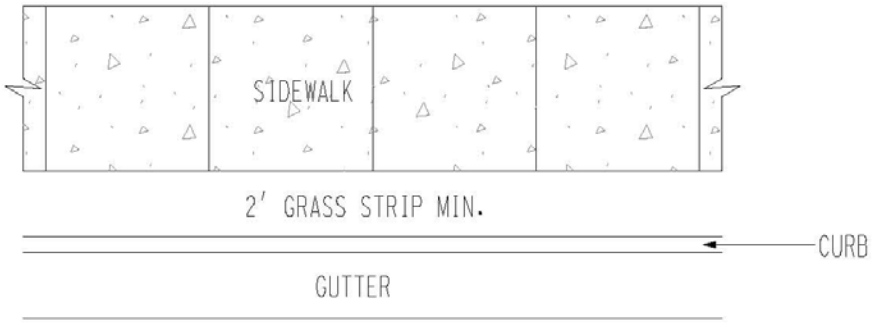

PLAN

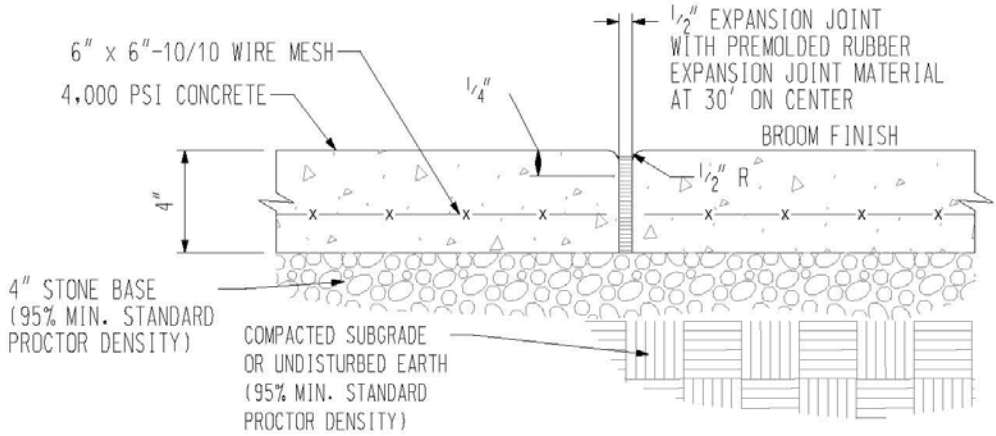

EXPANSION / CONTRACTION JOINT DETAIL

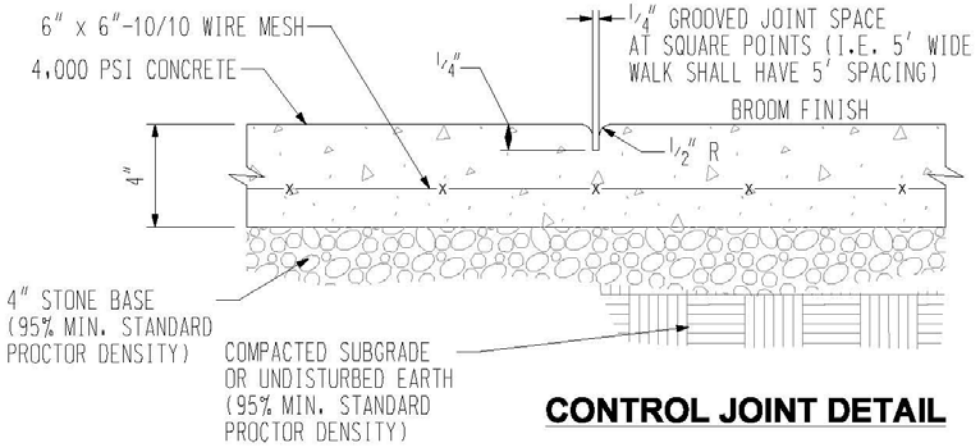

CONTROL JOINT DETAIL

TOWN OF SMYRNA TENNESSEE 1869

CONCRETE SIDEWALK

REVISION:	0			
DATE:	5/02/2008			

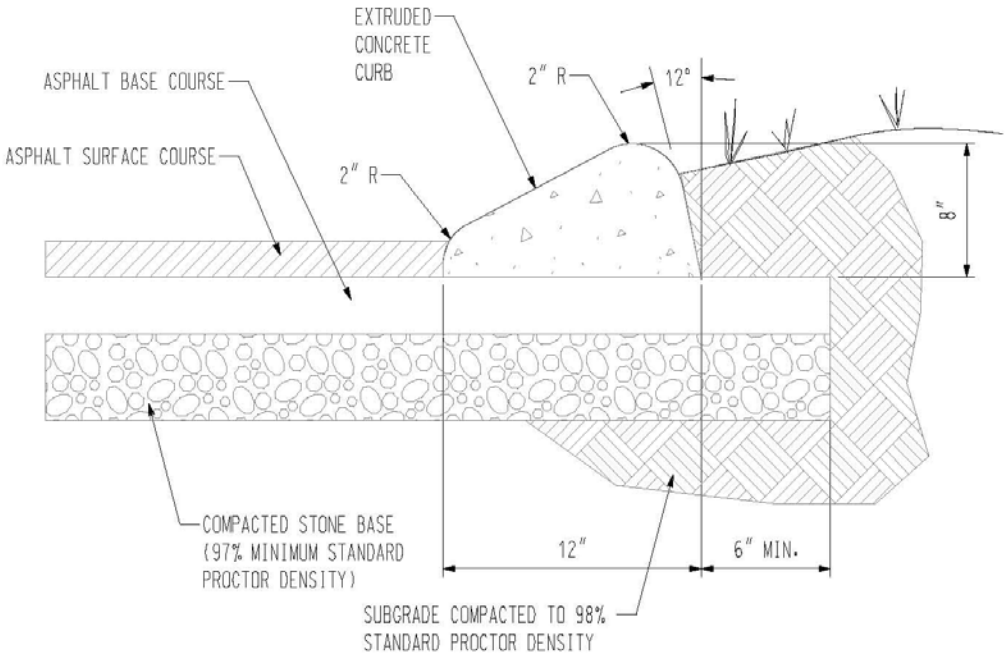

NOTES:

1. CONTRACTION JOINTS SHALL BE 1/2" WIDE AND FULL DEPTH. JOINTS SHALL BE PLACED AT A MAXIMUM OF 50 FEET LONGITUDINAL INTERVALS AND AT ALL ABUTTING STRUCTURES, DRIVEWAYS, AND TANGENT POINTS OF RADIUS RETURNS.
2. TOOLED CURB CONTROL JOINTS SHAL BE PLACED 1/4" WIDE, 1" DEEP, AND 5 FEET ON CENTER
3. ALL CONCRETE TO COMPLY WITH ACI 318 WITH A MINIMUM COMPRESSIVE STRENGTH OF 4,000 PSI AT THE 28 DAYS TEST.
4. CONCRETE TO BE AIR-ENTRAINED WITH AN AIR CONTENT OF 4-6%.
5. JOINTS TO BE FILLED WITH BITUMINOUS EXPANSION MATERIAL.
6. UTILIZE JOHN BOUCHARD AND SONS CASTING NUMBER 3103.

TOWN OF SMYRNA TENNESSEE 1869

8" EXTRUDED CONCRETE CURB

REVISION:	0			
DATE:	3/24/2009			

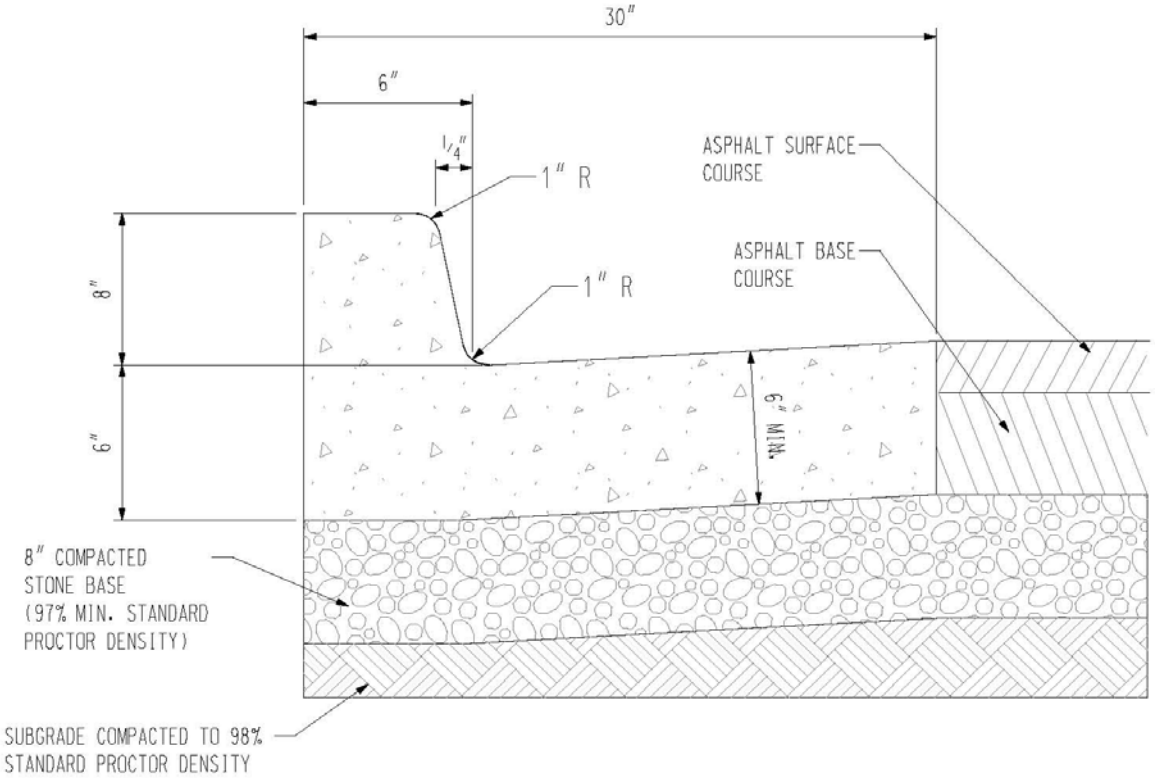

NOTES:

1. CONTRACTION JOINTS SHALL BE 1/2" WIDE AND FULL DEPTH. JOINTS SHALL BE PLACED AT A MAXIMUM OF 50 FEET LONGITUDINAL INTERVALS AND AT ALL ABUTTING STRUCTURES, DRIVEWAYS, AND TANGENT POINTS OF RADIUS RETURNS.
2. TOOLED CURB CONTROL JOINTS SHAL BE PLACED 1/4" WIDE, 1" DEEP, AND 5 FEET ON CENTER
3. ALL CONCRETE TO COMPLY WITH ACI 318 WITH A MINIMUM COMPRESSIVE STRENGTH OF 4,000 PSI AT THE 28 DAYS TEST.
4. CONCRETE TO BE AIR-ENTRAINED WITH AN AIR CONTENT OF 4-6%.
5. JOINTS TO BE FILLED WITH BITUMINOUS EXPANSION MATERIAL.

STANDARD CURB AND GUTTER

REVISION:	0			
DATE:	5/02/2008			

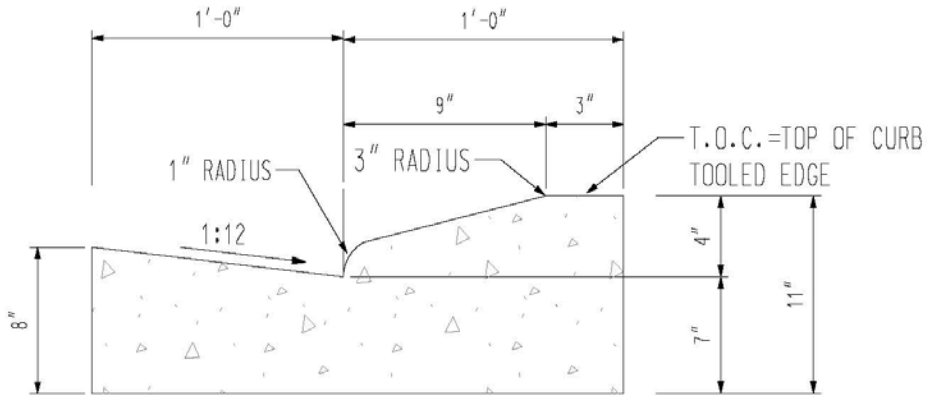

NOTES:

1. CONTRACTION JOINTS SHALL BE ½" WIDE AND FULL DEPTH. JOINTS SHALL BE PLACED AT A MAXIMUM OF 50 FEET LONGITUDINAL INTERVALS AND AT ALL ABUTTING STRUCTURES, DRIVEWAYS, AND TANGENT POINTS OF RADIUS RETURNS.
2. TOOLED CURB CONTROL JOINTS SHAL BE PLACED ¼" WIDE, 1" DEEP, AND 5 FEET ON CENTER
3. ALL CONCRETE TO COMPLY WITH ACI 318 WITH A MINIMUM COMPRESSIVE STRENGTH OF 4,000 PSI AT THE 28 DAYS TEST.
4. CONCRETE TO BE AIR-ENTRAINED WITH AN AIR CONTENT OF 4-6%.
5. JOINTS TO BE FILLED WITH BITUMINOUS EXPANSION MATERIAL.
6. 18" FRAME AND GRATE REQUIRED, UTILIZE JOHN BOUCHARD AND SONS CASTING NUMBER 2240D FRAME AND GRATE, AND JOHN AND BOUCHARD CASTING NUMBER 3104-V CURB BACK.

TOWN OF SMYRNA TENNESSEE 1869

ROLLOVER CURB WITH GUTTER

REVISION:	0			
DATE:	3/20/2009			

6-302 Road Construction Specifications

	Right of Way Width	Base Width	Base Thickness	Surface Course Width	Total Pavement Thickness
Residential Roads					
Neighborhood Minor	50'	25'	8"	22'	4 1/2"
Neighborhood Collector	50’	27’	8”	24’	4 1/2"
Collector	60"	27'	8"	24'	4 1/2"
Arterial					
2 Lane	80'	33'	8"	28'	7 1/2"
3 Lane	80'	41'	8"	36'	7 1/2"
4 Lane	90’	53’	8”	48’	7 1/2"
5 Lane	105'	65'	8"	60'	7 1/2"
Nonresidential Roads					
Minor	50'	33'	8"	28'	4 1/2"
Collector	60'	35'	8"	30’	4 1/2
Arterial					
2 Lane	80'	33'	10"	28'	7 1/2"
3 Lane	80'	41'	10"	36'	7 1/2"
4 Lane	92’	53’	10”	48’	7 1/2”
5 Lane	105'	65'	10"	60'	7 1/2"

Notes:

1. Curb and gutter width is excluded from surface coarse width.
2. Surface coarse width shall be asphalt pavement width.

SECTION IV. MATERIALS SPECIFICATION AND CONSTRUCTION PROCEDURES

6-401 Preliminary Work

6-401.1 Location and Protection of Underground Utilities - Prior to beginning excavation or grading, the subdivider shall determine, insofar as possible, the actual locations of all underground utilities in the vicinity of his operations and shall clearly mark them so that they can be avoided by equipment operators. Subdivider shall contact Tennessee One-Call at 1-800-351-1111 or 811 to assist in these locations. Where such utility lines or services appear to lie in the path of construction, they shall be uncovered in advance to determine their exact location and depth and to avoid damage due to excavation or grading operations. Existing facilities shall be protected during construction or removed and replaced in equal condition, as necessary.

Should any existing utility line or service be damaged during or as a result of the subdivider's operations, the subdivider shall take such emergency measures as may be necessary to minimize damage and shall immediately notify the utility agency involved. The subdivider shall then repair the damage to the satisfaction of the utility agency or shall pay the utility agency for making the repairs. In all cases the damaged structure shall be in as good or better condition as before the damage occurred.

6-401.2 Surveying and Staking - The subdivider shall be responsible for his own surveys and establish his own grades unless otherwise directed by the enforcing officer.

6-401.3 Removal of Obstructions - The subdivider shall be responsible for the removal, safeguarding, and replacement of fences, walls, structures, culverts, street signs, billboards, shrubs, mailboxes, or other obstructions which must be moved to facilitate construction. Such obstructions shall be restored to at least their original condition.

6-401.4 Clearing and Grubbing - The subdivider shall be responsible for cutting, removing, and disposing of all trees, brush, stumps, roots, and weeds within the construction area. Bush hogging, mowing, and tree cutting shall be considered clearing and grubbing. Stump and root removal and other soil disturbance shall require the issuance of a grading permit prior to beginning activity. Disposal shall be by means of chippers, landfills, or other approved methods not in conflict with state or local ordinances.

Care shall be taken to avoid unnecessary cutting or damage to trees not in the construction area. The subdivider shall be responsible for loss or damage to trees outside the permanent easement or rights-of-way.

6-401.5 Traffic Control and Safety - The subdivider shall provide and maintain access to and from all properties along the line of his work. The subdivider shall also provide temporary bypasses and bridges where necessary to route traffic and shall maintain them in a safe and usable condition whenever, in the opinion of the enforcing officer, detouring of traffic to parallel routes cannot be done without hardship or excessive increase in travel by the public.

Where single-lane bypasses are provided the subdivider shall furnish signalmen to control traffic operations and minimize delays.

The subdivider shall provide, erect, and maintain adequate barricades, warning signs, and lights at all excavations, closures, detours, points of danger, and uncompleted pavement in accordance with the Manual of Uniform Traffice Control Devices (MUTCD).

6-402 Roadway Construction

6-402.1 Stripping, Stockpiling, and Placing Topsoil - All topsoil shall be stripped within the street right-of-way and from any other area designated by the Director of Public Works. Topsoil shall be stored in stockpiles. All organic matter within the right-of-way shall be stripped and disposed of unless directed otherwise by the Director of Public Works.

A six (6) inch layer of topsoil shall be placed where seeding is required or where required by the enforcing officer.

After the stockpiled topsoil has been placed as specified above, the area where the topsoil was stockpiled shall be neatly graded and dressed.

6-402.2 Excavation - Excavation shall conform to limits indicated on the plans. Excavation materials shall be removed in such manner that the slopes can be neatly trimmed. Excavation shall not be made below grade except where rock or stone masonry is encountered or undercutting of unstable materials is required. Materials removed below grade shall be replaced with approved materials thoroughly compacted. Where borrow materials are required to complete embankments or fills the subdivider shall be responsible for providing them.

Rock excavation shall be removed to a minimum depth of twelve (12) inches below the subgrade and backfilled with approved materials which shall be thoroughly compacted.

Where a spring or seepage water is encountered that is not provided for on drainage plans it shall be reported to the Director of Public Works along with engineered drawings as to allow proper conveyance of water in accordance with TDEC requirements.

6-402.3 Fills and Embankments - Embankment and fill materials shall be free from frost, stumps, trees, roots, sod, or muck. Only materials from excavation or borrow pits, or other materials approved by the Director of Public Works shall be used. Materials shall not be placed on frozen ground.

Where excavated materials are used in fill construction and the materials consist of earth and various grades of rock, the fills shall be carefully constructed with the larger or hard rock on the bottom followed by the smaller or soft rock and finally the earth fill to provide a well-compacted and void-free embankment.

All depressions or holes below the natural ground surface, whether caused by grubbing, rock removal, undercutting, or otherwise, shall be filled with suitable materials and compacted to ground surface before fill construction is started.

Backfilling around a structure shall have been completed and thoroughly compacted to ground surface before any embankment materials are placed thereon.

Embankments shall be so constructed that adequate surface drainage will be provided at all times.

Fill areas located outside of the roadway shall be compacted by a sheep's foot roller, to a density of not less than ninety-five (95) percent Standard Proctor and each lift of fill materials shall be rolled until the roller "walk out".

The roadway finished grade shall be test rolled with a fully loaded tandem axle dump truck to be selected by the Director of Public Works. Any areas found to be soft or "pumping" shall be cut out and replaced with clean and machined 6” surge stone (minimum 12” depth) and 12” of compacted crushed pug mill mix installed in suitable compacted lifts, and each lift shall be compacted to minimum of ninety-eight percent (98%) and until the excavation has been brought back to finish grade. Limits of proof rolling with a fully loaded tandem axle dump truck shall be located at a point two (2) feet behind the curb.

Fill materials shall be placed in eight (8) inch lifts, maximum thickness. Where excavated materials consist mainly of rock too large to be placed in the normal eight (8) inch thickness crushing or further breaking down the pieces will be required No rock larger than eight (8) inches in dimension shall be placed in fill. Care shall be taken to fill all voids between large rocks and to assure that fill materials are compacted such that settling does not occur.

Backfill around structures shall be of crushed stone where located within the roadway. Suitable earth/soil meeting the approval of the Director of Public Works or designee may be utilized around structures located outside of the roadway. All fill shall be placed and compacted in eight (8) inch lifts and brought up evenly on all sides of the structure.

6-402.4 Undercutting - This work shall consist of the removal and disposal of unsatisfactory materials below grade in cut sections or areas upon which embankments are to be placed. It shall also include undercutting for pipes and box culverts where required.

Known areas to be undercut shall be designated on the materials approved by the Director of Public Works. The backfill materials shall be placed in eight (8) inch lifts and compacted as specified for fill construction.

Disposal of unsatisfactory materials shall be approved by the Director of Public Works.

6-402.5 Subgrade Construction and Preparation - The subgrade shall be prepared in reasonably close conformity with the lines and grades as shown on the plans. Centerline and curb and gutter offset stakes must be in place and set by the developer prior to proof rolling of subgrade and base stone. Blue-top markers must be set by the developer and in place on the base stone prior to proof rolling.

Grading of subgrade shall be performed in such manner as to provide positive drainage of water. Ditches and drains shall be maintained to provide proper drainage during construction.

Hauling over finished subgrade shall be limited to that which is essential for construction purposes, and all ruts or rough places that develop in a completed subgrade shall be smoothed and recompacted. Soft areas shall be removed and replaced with crushed stone or as directed by the Director of Public Works.

The subgrade shall have a six-inch crown at the roadway centerline, or as otherwise specified by the Director of Public Works. Subgrade and base stone, in addition to compaction requirements, shall be proof rolled and observed by a representative of the Director of Public Works with a fully loaded tandem axle dump truck.

Subgrade density tests, when required by the Director of Public Works, shall be conducted by a local testing laboratory, approved by the Town and licensed by the State of Tennessee, being furnished at the expense of the developer/owner and two copies of said reports submitted directly to the Director of Public Works. The developer/owner shall request in writing to the Director of Public Works when (the date envisioned) any inspection by the Director of Public Works of the subgrade is desired. A minimum of one subgrade density test for every constructed subdivision street and/or one thousand (1,000) feet of roadway therein shall be required.

The subgrade must be compacted to at least 98% of its maximum dry density as determined by ASTM-D-698 (Standard Proctor).

It shall be the responsibility of the Director of Public Works to decide after the filing of the request for inspection by said developer/owner, the

location of all test area(s) as well as the time or date the testing by an approved testing laboratory shall be conducted.

The developer/owner shall be responsible for reimbursing the Town for all costs engendered by the Director of Public Works, with respect to the evaluation of the test site(s), as well as the required laboratory testing report.

Any areas identified as failing the proof rolling or compaction tests shall require undercutting to undisturbed soil with placement of clean machined 6" surge stone (12") minimum thickness) and capped with 12" crushed stone pug mill mix (12") minimum thickness) compacted to 97% in 4" layers. The Director of Public Works may review and approve other methods to correct these problems.

If the findings of the test report requires any repetition of such test is required, the cost of such test, as well as the test and subgrade review fees of the Director of Public Works shall be borne solely by the project developer/owner.

The subgrade shall be approved by the Director of Public Works for adherence to the plans before any base materials are placed.

6-402.6 Shoulders and Slopes - All shoulders and slopes shall be trimmed and shaped to conform with the cross sections shown on the plans and as specified in Section 6-403.3. Rock cuts shall be sealed of all loose fragments, projecting points, etc., so as to leave a clean and neat appearance. Shoulders shall be completed where required as shown on the plans and shall be double bituminous surface treated, with care being taken to protect the surface and edges of pavement. Shoulder materials shall be placed in uniform layers and compacted by overlapped rolling of both base course and pavement. The finished shoulder shall be part of the pavement (binder and topping).

6-403 Base and Paving

6-403.1 Base Stone - The base course of stone shall be placed and compacted to 97% in layers or lifts upon the prepared and compacted subgrade (98%) to a finish thickness as described and shown on the plans. No single layer or lift shall exceed four (4) inches in depth.

The base course shall be a pugmill mix of mineral aggregate conforming to the technical specifications set forth in Section 303 of TDOT Standard Specifications. The aggregate base shall not be spread on a subgrade that is frozen or that contains frost. The base shall be placed and spread in uniform layers or lifts without segregation of size; each layer shall be compacted to a thickness no greater than four (4) inches. The stone shall be mixed with graders or other equipment until a uniform mixture is obtained. Each layer shall be compacted by rolling with alternate blading until a smooth, even, and uniformly compacted finish is obtained.

The base stone shall be graded and rolled while it is still moist from the pugmill mix. If the enforcing officer determines that the mix is too dry, water shall be added with a distributor tank truck while the stone is being graded and rolled. Compaction shall be uniform for the entire width of the [6]roadway until a density of ninety-seven percent (97%) of the solid volume has been achieved. Placement and compaction of each layer shall be approved by the Director of Public Works (or designee) before materials for the next successive layer are placed.

No pavement shall be placed until the stone base has been approved by the Director of Public Works (or designee).

6-403.2 Prime Coat - After the base stone has been prepared as outlined above, a bituminous prime coat shall be applied uniformly over the surface of the base by the use of an approved bituminous distributor. The prime coat shall be applied at the rate of the three-tenths (3/10) gallon per square yard, using Grade RC-70 or RC-250, or refined tar Grade RT-2, RT-3, or emulsified asphalt, Grade AE-P. If, after the bituminous materials have been applied, they fail to penetrate before the time that the roadway is to be used by traffic, dry cover materials shall be spread at a rate established by the Director of Public Works, (between eight (8) and twelve (12) pounds per square yard) to prevent damage to the primed surface. An excess of cover materials shall be avoided. No succeeding state of construction shall be placed upon the prime coat until it has properly cured. Aggregate for cover materials shall be Size No. 7 or 8.

In addition to these general requirements, unless otherwise stipulated, all materials and methods of installation shall conform to the technical specifications set forth in Section 402, Standard Specifications.

6-403.3 Tack Coat - A tack coat shall be applied to old or existing pavement surface or to a previously prepared base or surface to provide bond for an overlaid course. The tack coat shall be applied at the rate of one-tenth (1/10) gallon per square yard using materials and methods of installation set forth in Section 403, Standard Specifications.

6-403.4 Base Course - Upon completion of the prime coat, and asphaltic concrete base (hot mix) course shall be applied. The base course shall be the thickness shown on the detail sheet and as specified in the subdivision regulations. All materials and methods of installation shall conform to the technical specification set forth in Section 307, Standard Specifications for asphaltic concrete base. The asphaltic base shall be constructed of Grade B modified (BM) materials described in Section 307.03, Standard Specifications. The Town shall be notified of the intent to install the base course at least forty-eight (48) hours prior to the beginning of work.

6-403.5 Wearing Surface - The wearing surface shall be applied upon the asphaltic base course after the application of the tack coat. The wearing

surface shall be the thickness shown on the detail sheet and as specified in the Subdivision Regulations. All materials and methods of installation shall conform to the technical specifications set forth in Sections 411 and 307, Standard Specifications for asphaltic concrete surface. The wearing surface shall be constructed of Grade D, E and CW materials described in Section 903.11, Standard Specifications, and shall utilize asphaltic cement Grade RT-4 or 5, or TRCB-5 or 6, as set forth in Section 904, Standard Specifications. The wearing surface shall not be installed until at least seventy-five (75) percent of the buildings (residences, commercial buildings, etc.) associated with this subdivision are complete. The Town shall be notified of the intent to install the wearing surface at least forty-eight (48) hours prior to the beginning of work. Milling shall be required at transition areas and/or phase connection points of subdivisions. Milling of the existing topping shall be performed as to allow a true transition of the new topping layer.

6-403.6 Shoulders - Shoulder construction shall be completed by bleeding, moistening as necessary, and by thoroughly compacting. The shoulders shall be the width and thickness shown on the typical section as required herein and covered with a double bituminous surface treatment. The surface shall be prepared as directed in advance of the surface construction. Upon completion of the prime coat, a double bituminous surface treatment shall be applied with the first course being at a rate of between 0.38 and 0.42 gallons per square yard. If the width of application is wider than the distributor, each width of spread shall not be less than one-half (1/2) the surface to be treated. Areas inaccessible to the distributor shall be treated either with hand sprays or pouring pots. Immediately after each application of bituminous materials has been made, it shall be covered uniformly with Size No. 6, mineral aggregate. The aggregate shall be spread at a rate of between thirty (30) and forty (40) pounds per square yard. This first application shall be allowed to cure for a length of time to be determined by the enforcing officer before the second application is begun.

The second application of bituminous materials shall be applied in the same manner as the first application, at a uniform rate between 0.30 and 0.35 gallons per square yard. Mineral aggregate, Size No. 7, shall then be spread in the same manner as for the first spread at a rate between twenty (20) and twenty-five (25) pounds per square yard.

Immediately after each spread of cover aggregate, uniform coverage shall be achieved by hand brooming. Additional aggregate shall be placed by hand on thin or bare areas.

Immediately after spreading and brooming the cover aggregate, the entire surface shall be rolled, beginning at the edges and progressing to the edge of the pavement. Rolling shall begin within thirty (30) minutes after the aggregate has been spread. The same rolling and curing procedures required in making the first application shall be repeated in making the second application.

In addition to these general requirements, unless otherwise stipulated, all materials and methods of installation shall conform to the technical specifications set forth in Section 404, Standard Specifications.

6-404 Drainage System Design

6-404.1 Ditching and Channelization - This work shall consist of the construction of ditches adjacent to roadway shoulders and feeding to and from culverts under or adjacent to the roadway. All drainage ditches shall be graded in their entirety during the time the roadways are being graded and such grading shall be completed prior to final inspection of the roadways.

6-404.2 Stabilization of Ditches - All open ditches shall be stabilized in accordance with the following requirements:

Size of Nearest Culvert (Upstream)	Seeding Required	Sod Required	To be Concrete Lined
15"	Grades 1.00%-3.00%	Grades 3.00%-12.00%	Grades Exceeding 12.00%
18" thru 24"	Grades 1.00%-1.50%	Grades 1.50%-7.00%	Grades Exceeding 7.00%
30" thru 36"	Grades 1.00%-1.50%	Grades 1.00%-4.00%	Grades Exceeding 4.00%
42" thru 72"	Grades	Grades 2.50% or Less	Grades Exceeding 2.50%

6-404.3 Concrete Ditch Paving - Concrete ditch paving shall consist of the construction of paved ditches on a prepared subgrade. The subgrade shall be shaped and compacted to a firm even surface. All soft materials shall be removed and replaced with acceptable materials and shall be compacted as directed by the enforcing officer.

Concrete ditch pavement shall be four (4) inches in thickness throughout and shall be backfilled immediately after the concrete has set and the forms have been removed. The backfilled materials shall be thoroughly compacted. Expansion joints shall be located as directed by the Director of Public Works.

6-404.4 Culverts and Storm Drains - This work shall consist of the construction of pipe culverts and storm sewers as shown on the plans.

Driveway culverts shall be a minimum diameter of eighteen (18) inches and a minimum length of sixteen (16) feet; cross drains shall be a minimum diameter of eighteen (18) inches.

Reinforced concrete pipes shall conform to minimum standards for Class III, Reinforced Pipes, A.S.T.M. C76. Corrugated metal pipes shall conform to Section 915.02 or 915.04, Standard Specifications and to gage as follows:

Pipe Selection Criteria Based on System and Fill Height[13]

	≤ 10 ft	**> 10 ft and ≤ 18 ft**	**> 18 ft and ≤ 27 ft**	**> 27 ft and ≤ 41 ft**	**> 41 ft**
Freeways					
Cross drains	RCP CL III	RCP CL III	RCP CL IV	RCP CL V	Note 1.
Transverse median drains	RCP CL III	RCP CL III	RCP CL IV	RCP CL V	Note 1.
Longitudinal storm drains	RCP CL III	RCP CL III	RCP CL IV	RCP CL V	Note 1.
Arterials					
Cross drains	RCP CL III	RCP CL III	RCP CL IV	RCP CL V	Note 1.
Transverse median drains	RCP CL III	RCP CL III	RCP CL IV	RCP CL V	Note 1.
Longitudinal storm drains	RCP CL III	RCP CL III	RCP CL IV	RCP CL V	Note 1.
Collectors					
Cross drains	RCP CL III	RCP CL III	RCP CL IV	RCP CL V	Note 1.
Transverse median drains	RCP CL III	RCP CL III	RCP CL IV	RCP CL V	Note 1.
Longitudinal storm drains	RCP CL III	RCP CL III	RCP CL IV	RCP CL V	Note 1.
Local Roads ≥ 1000 ADT					
Cross drains	RCP CL III	RCP CL III	RCP CL IV	RCP CL V	Note 1.
Storm drains	RCP CL III	RCP CL III	RCP CL IV	RCP CL V	Note 1.
Local Roads < 1000 ADT					
Cross drains	RCP CL III	RCP CL III	RCP CL IV	RCP CL V	Note 1.
Storm drains	RCP CL III	RCP CL III	RCP CL IV	RCP CL V	Note 1.
Side Drain Pipes (Pipes under private drives, business or field entrances)	RCP CL III CMP 16g Note 2.	RCP CL III CMP 14g	RCP CL IV CMP 14g	RCP CL V CMP 14g	Note 1.
Longitudinal Median Drains (All Systems) Grassed Depressed Medians	RCP CL III 16g note 2.	RCP CL III	RCP CL IV	RCP CL V	Note 1.

Note 1. Structural, hydraulic, and cost analysis required for pipes with a fill height over 41 feet.

Note 2. The minimum cover for design loads shall be not less than 12-inches. The minimum cover shall be measured from the top of the rigid pavement or the bottom of the flexible pavement.

For pipes smaller than forty-eight (48) inches in diameter, a minimum cover of one (1) foot, exclusive of base and paving, is required from top of pipes to finished subgrade. A minimum cover of two (2) feet is required for pipes forty-eight (48) inches in diameter and larger. All pipes shall be built on straight line and grade and shall be laid with the spigot end pointing in the direction of the flow, with the ends fitted and matched to provide tight joints and smooth uniform invert.

Pipes shall be bedded on a six (6) inch thickness of Class B materials and backfilled to a depth of thirty (30) percent of the diameter of the pipes. Recesses shall be dug in the bedding materials to accommodate the bell. Class B bedding shall be Size No. 7, as shown in Chart No. 903.23, Standard Specifications. Culverts and storm drains in existing roadways shall be backfilled to the depth of the cut.

All open cut excavation trenches utilized to install utilities, piping, etc. (and areas as identified by the Public Works Director's representative) located within the roadway, shoulder, subgrade, and base areas shall be completely backfilled with either approved suitable subgrade material (at maximum lift thicknesses of 8" and compacted to 98% standard proctor density) or TDOT No. 67 stone. If approved suitable materials are used to backfill trench areas, then the contractor shall retain (at his expense) a certified getotechnical engineer registered in the State of Tennessee to perform compaction tests at a maximum distance of 500 feet on each 8" lift or at lesser intervals as may be directed by the Public Works Director's representative. All roadway base areas shall be completely backfilled with TDOT No. 67 mineral aggregate stone. The top 12" of the trench area's stone backfill shall consist of compacted Class A Grade D crushced stone compacted to 98% standard proctor density.

6-404.5 Headwalls - Concrete headwalls shall be constructed at both ends of cross drains as shown and detailed on the standard drawings included herein.

6-404.6 Catchbasins - This work shall consist of constructing catchbasins complete with inlets, outlets, and inverts. Tops and inlets shall be constructed to conform to the roadway grade so that drainage can easily be caught and no ponding created. Catchbasins shall be constructed as shown and detailed on the standard drawings contained herein.

6-404.7 Box Culverts and Bridges - Design of box culverts and bridges shall be submitted to the enforcing officer for approval before any construction is permitted.

6-404.8 Roadside Ditches - Roadside ditches, in conventional sections, shall be built to a grade that will permit good drainage, and in no case shall the slope of the ditch be less than one percent (a fall of

1.00 foot in 100 feet). All drainage ditches shall be stabilized to prevent erosion as indicated in these specifications.

6-404.9 Changes in Water Channels - Where the subdivider rechannelizes water through a subdivision he will be responsible for replacing cross drains under public streets, as directed by the Director of Public Works. This work shall be done at the expense of the subdivider.

6-404.10 Hydraulic Design[14] - Storm water collection and conveyance systems for proposed developments shall be designed with sufficient hydraulic capacity for the 25 year storm frequency. Minor and collector roadway systems shall be designed for the 25-year storm frequency. Arterial roadway systems shall be designed for the 50-year storm frequency with the 100-year storm frequency studied to ensure water does not overtop the roadway and does not impact upstream properties as a result of inlet backup water.

6-404.11 Storm Water Detention[15] - Storm water detention design and calculations shall provide adequate detention volume and freeboard within the detention basin for both the 0.5 inch first flush volume and the 25-year storm frequency volume, based on the post development runoff rates. The detention basin calculations shall include the study of routing a 50-year storm frequency through an emergency overflow or by other means as to ensure flooding of the adjacent structures and properties does not occur. The detention basin discharge structure shall be designed as to regulate the post development runoff rate based on the 2, 5, 10, and 25-year storm frequencies by means of a circular orifice, a non-circular orifice, a rectangular weir, a trapezoidal weir, a triangular weir, a “V”-notch weir, culvert entrance control structure, or riser overflow opening. The post development discharge rate for the 2, 5, 10, and 25-year storm frequencies shall not exceed the pre-development runoff rates. The detention basin design and calculations shall also include any offsite drainage areas contributing to the collected runoff of the proposed developed site, if routed through the detention basin. All components of the detention basin design shall also be in accordance with the Town of Smyrna’s National Pollution Discharge Elimination System (NPDES) General Permit Application for Municipal Separate Storm Sewer System (MS4) Phase II Program and the Town of Smyrna’s Dry Detention Basin Policy.

6-405 Final Dressing, Seeding, and Sodding

6-405.1 Final Dressing - This work shall consist of dressing all slopes and areas to within reasonable close conformity to the lines and grades indicated on the plans, or as directed by the Director of Public Works. Final dressing shall be performed by hand or machine to produce a uniform finish to all parts of the roadway including embankments, ditches, etc. Rock cuts shall be cleaned of all loose fragments; side slopes shall be laid back to a three to one (3:1) slope and seeded as described in these specifications.

The entire right-of-way shall be cleaned of all weeds and brush and all structures both old and new shall be cleared of all brush, rubbish, sediment, or other objectionable materials.

6-405.2 Seeding - In all areas damaged or disturbed by the construction operation where established ground cover was present before beginning of construction, the subdivider shall be responsible for restoring the ground cover after completion of construction, unless noted otherwise on drawings. All areas seeded shall be graded smooth prior to seeding and the subdivider shall be responsible for maintenance of the smooth finished grade until grass is established.

After designated areas have been carefully hand graded, soil shall be prepared for fertilizing and seeding. Fertilizer shall be a standard commercial fertilizer Grade 15-15-15 or equivalent, and shall be applied at a rate of not less than ten (10) pounds per one thousand (1,000) square feet. The fertilizer shall be lightly harrowed, raked, or otherwise incorporated into the soil for a depth of approximately one half (1/2) inch. The subdivider shall be responsible for any regrading or reseeding required to produce an acceptable grass cover. Rutting and washing shall be restored by reseeding and strawing; in areas of extreme erosion sodding may be required.

The seed shall be as follows:

Name	Percent by Weight
Lespedeza	20
Sericea Lespedeza	15
Kentucky 31 Fescue	40
English Rye	15
White Dutch Clover	5
Weeping Love Grass	5
Kentucky 31 Fescue	55
Redtop	15
English Rye	20
White Dutch Clover	5
Weeping Love Grass	5

The seed shall be sown uniformly at the rate of one and one-half (1 1/2) pounds per one thousand (1,000) square feet.

6-405.3 Sodding - Sodding shall consist of furnishing and placing sod at all locations shown on the plans, or as directed by the Director of Public Works. Work shall include the furnishing and placing of new sod, consisting of live, dense, well-rooted growth of permanent grasses free from Johnson grass and other obnoxious grasses or weeds, well suited for the soil on which it is placed. All sod shall be cleanly cut in strips having a uniform thickness of not less than two and one-half (2 1/2) inches. Sod shall be set when the soil is moist and favorable to growth. No setting shall be done between October

1 and April 1, without permission of the Director of Public Works. The area to be sodded shall be brought to the lines and grades shown on the plans, or as directed by the Director of Public Works.

The surface of the ground to be sodded shall be loosened to a depth of not less than one (1) inch with a rake or other device. If necessary, it shall be sprinkled until saturated for a minimum depth of one (1) inch and kept moist until the sod is placed. Immediately before placing the sod, fertilizer and lime shall be applied uniformly to the prepared surface of the ground. Fertilizer shall be applied at the rate of eight (8) pounds of Grade 15-15-15, or equivalent, per one thousand (1,000) square feet.

Sod shall be placed as soon as practical after removal from the point of origin; it shall be kept in a moist condition during the interim. Sod shall be carefully placed by hand on the prepared ground surface with the edges in close contact and, as far as possible, in a position to break joints. Each strip of sod laid shall be fitted into place and tamped. Immediately after placing, the sod shall be thoroughly wetted and rolled with an approved roller. On slopes of two to one (2:1) or steeper, pinning or pegging may be required to hold the sod in place.

The sod shall be watered for a period of two (2) weeks. The subdividershall not permit any equipment or materials to be placed on any planted area and shall erect suitable barricades and guards to prevent equipment, labor, or the public from traveling on or over any area planted with sod.

ASSURANCE FOR COMPLETION AND MAINTENANCE OF IMPROVEMENTS

7-101 Improvements and Letters of Credit/Escrow Accounts

7-101.1 Completion of Improvements -- Before the final subdivision plat is signed by the Planning Commission officer specified in Section 3-106.1 of these regulations, all applicants shall complete, in accordance with the Planning Commission's decision and to the satisfaction of the Director of Public Works and the Director of Utilities, all public way, sanitary, and other improvements, including lot improvements on the individual lots of the subdivision, as required in these regulations and approved by the Planning Commission, and shall dedicate such improvements to the governing body free and clear of all liens and encumbrances on the property and public improvements thus dedicated. To this end, "as-built" plans as discussed in Section 3-106.1(2) herein shall be approved by said Director of Public Works and the Director of Utilities. These “as-built” plans must be submitted prior to the release of the financial surety on the plat.

7-101.2 Surety Instrument[16] -- The Planning Commission at its discretion may waive the requirement that the applicant complete and dedicate all public improvements prior to the signing of the final subdivision plat by providing that, as an alternative, the applicant post a bond at the time of submission for final subdivision approval in an amount estimated by the Planning Commission as sufficient to guarantee to the governing body the satisfactory construction, installation, and dedication of the incomplete portion of required improvements.

Said estimate shall include an additional twenty percent (20%) over and above the cost of securing all necessary improvements to cover the increase in costs due to inflation or other factors over the bondable period. The letter of credit or escrow funds also shall secure all lot improvements on the individual lots of the subdivision as required in these regulations. The Town may dispose of funds in any manner deemed appropriate and available to remedy improvements not constructed to the specified standards.

A performance bond/agreement authorized by the Planning Commission shall be secured by either an irrevocable letter of credit or a cashier’s check. The beneficiary of the surety shall be the Town of Smyrna. Such letter of credit shall comply with all statutory requirements and shall be satisfactory to the town attorney as to form, sufficiency, and manner of execution as set forth in these regulations. Accordingly, such letter of credit must be officially filed and approved on the appropriate form. Moreover, only commercial banks and federally chartered savings and loan associations located in Rutherford or Davidson County, Tennessee, shall be acceptable institutions for the issuance of letters of credit as required for the purposes of these regulations.

It shall be the responsibility of the Director of Public Works to establish the amount for roadway and drainage and the Director of Utilities to establish the amount for water and sewer improvements. The Town Planner shall establish the total amount based on the amounts calculated by the Director of Public Works and the Director of Utilities of all performance bonds or letters of credit. All such surety instruments shall be segregated into cost estimates for each specific type of improvements, i.e. streets, drainage, lot improvements, utilities, etc.

The period within which required improvements must be completed as assured through the use of a performance agreement and letter of credit shall be specified by the Planning Commission in the resolution approving the final subdivision plat and shall be incorporated in the agreement and letter of credit. This period shall be for one (1) year and shall not in any event exceed two (2) years from date of final approval. Moreover, whenever such agreement and letter of credit is extended according to these regulations, the price of completing all bondable improvements must be reanalyzed and established by the Planning Commission in order that the surety instrument be adequate to cover the cost of all improvements. Again, an additional twenty percent (20%) of the cost of securing all necessary improvements shall be added to this cost figure in order to insure that these improvements be properly installed in relation to the rate of inflation for the period of extension. Such agreement and letter of credit shall be approved by the Town Council or a designated representative as to amount, surety and conditions. The Planning Commission may recommend to the appropriate local legislative body, upon proof of difficulty, extension of the completion date set forth in such agreement and letter of credit (normally a one (1) year period) for a maximum period of one (1) additional year. The legislative body may accept, at any time during the period of such agreement and letter of credit, a substitution of principal or sureties on the agreement and letter of credit upon the recommendation of the Planning Commission.

7-101.3 Temporary Improvements -- The applicant shall build and pay for all costs of temporary improvements required by the Planning Commission, and shall maintain them to a reasonable satisfaction for the period specified by the Planning Commission. Prior to construction of any temporary facility or improvement, the applicant shall file with the governing body a separate suitable bond for temporary facilities, which shall ensure that the temporary facilities will be properly constructed, maintained, and removed.

7-101.4 Costs of Improvements -- All required improvements shall be made by the applicant at his expense. Any provisions for reimbursement

by the governing body or any utility agency shall be stipulated clearly in the provisions of any bonds.

7-101.5 Governmental Units -- Governmental units to which these bonds and contract provisions apply may file, in lieu of said contract or bond, a certified resolution or ordinance from officers or agencies authorized to act in their behalf agreeing to comply with the provisions of this article.

7-101.6 Failure to Complete Improvements -- All cases in which a performance bond has been posted and required improvements have not been installed within the terms of such performance bond, the governing body thereupon may declare the bond to be in default and require that all the improvements be installed regardless of the extent of the building development at the time the bond is declared to be in default.

7-101.7 Acceptance of Dedication Offers -- Acceptance of formal offers of dedication of public ways, easements, and parks shall be by formal action of the governing body. Such action shall be in the form of a resolution recommended by the Planning Commission to the legislative body. The approval by the Planning Commission of a subdivision plat shall not be deemed to constitute or imply an acceptance by the local government of any public way, easement, or other ground shown on the plat. The Planning Commission may require the plat to be endorsed with appropriate notes to this effect. No formal offers of dedication shall be accepted until build-out of the development is 90% complete.

7-102 Inspection of Improvements

7-102.1 General Procedure[17] -- The Planning Commission may provide for inspection of required improvements during construction and ensure their satisfactory completion. If the appropriate governmental representative finds upon inspection that any of the required improvements have not been constructed in accordance with the governing body's construction standards and specifications, the applicant shall be responsible for completing the improvements to the required standards. Whenever the cost of improvements is covered by a performance bond, the applicant and the commercial bank or federally chartered savings and loan association shall be liable severally and jointly for completing said improvements according to specifications.

7-102.2 Release or Reduction of Performance Bond

7-102.201 Certificate of Satisfactory Completion - The governing body shall not accept dedication of required public improvements nor release nor reduce a performance bond until the Director of Public Works and the Director of Utilities submits a certificate stating that all required improvements have been satisfactorily completed, and until the applicant's engineer or surveyor has certified to the Planning Commission, the Director of Public Works and Director of Utilities (through

submission of a detailed "as built" plans of the subdivision indicating location, dimensions, and construction materials of all facilities improvements, and any other information required by the Planning Commission) that the layout and the line and grade of all public improvements are in accordance with the approved construction plans for the subdivision. Upon such approval and recommendation, the governing body, thereafter, may accept the dedicated improvements in accordance with the procedures set forth in Sections 1-109.106 and 7-101.7 of these regulations.

7-102.202 Reduction of Performance Bond -- A performance bond may be reduced upon actual dedication and acceptance of public improvements and then only to the ratio that the public improvement dedicated bears to the total public improvements for the plat. In no event shall a performance bond be reduced below twenty-five (25) percent of the principal amount prior to final acceptance of all items covered under the bond.

7-103 Maintenance of Improvements -- The applicant shall be required to maintain all improvements including all lot improvements, until acceptance of the public improvements by the governmental body.

The applicant may be required to file a maintenance bond with the governing body prior to dedication, in an amount considered adequate by the Director of Public Works and the Director of Utilities and submitted to the Town Planner and in a form satisfactory to legal counsel in order to assure the satisfactory condition of the required improvements, including all lot improvements, for a period of one year after the date of acceptance of the public improvements by the governing body. The minimum amount of a maintenance bond pertaining to public ways shall not be less than twenty percent (20%) of the total amount of the surety bond filed with the town to construct said public way.

7-104 Deferral or Waiver of Required Improvements -- The Planning Commission may defer or waive at the time of final approval, subject to appropriate conditions, the provision of any or all such improvements as, in its judgment, are not requisite in the interest of the public health, safety, and general welfare, or which are inappropriate because of inadequacy or lack of connecting facilities.

Whenever it is deemed necessary by the Planning Commission to defer the construction of any improvements required herein because of incompatible grades, future planning, inadequate or lack of connecting facilities, or for other reasons, the developer shall either pay his share of the costs of the future improvements to the governing body prior to signing of the final subdivision plat by the Planning Commission secretary or the Director of Public Works or the Director of Utilities or post a bond or other surety instrument ensuring completion of said improvements upon demand of the governing body.

7-105 Escrow Deposits for Lot Improvements

7-105.1 Acceptance of Escrow Funds -- Whenever, by reason of the season of the year, any lot improvements required by these regulations cannot be performed, the enforcing officer nevertheless may issue a certificate of occupancy upon accepting a cash escrow deposit in an amount to be determined by the appropriate governmental representative for the cost of such improvements; provided, there otherwise is no danger to the health, safety, or general welfare. The performance bond covering such lot improvements shall remain in full force and effect.

7-105.2 Procedures on Escrow Funds -- All required improvements for which escrow monies have been accepted by the enforcing officer at the time of issuance of a certificate of occupancy shall be installed by the developer within a period of nine (9) months from the date of deposit and issuance of the certificate of occupancy. In the event that the improvements have not been installed properly at the end of the time period, the enforcing officer shall provide written notice of two (2) weeks to the developer requiring him to install the improvements, and in the event they are not installed properly, in the judgment of the enforcing officer, he may request the governing body to proceed to install or to contract for the installation of the necessary improvements in a sum not to exceed the amount of the escrow deposit.

At the time of the issuance of the certificate of occupancy for which escrow monies are being deposited, the applicant shall obtain and file with the enforcing officer, prior to obtaining the certificate of occupancy, a notarized statement from the purchaser(s) of the premise authorizing the enforcing officer to install the improvements at the end of the nine month period in the event the improvements have not been installed properly by the developer.

7-106 Issuance of Building Permits and Certificates of Occupancy[18]

(1) Building permits for new lots within a subdivision shall not be issued until the final plat has been recorded as specified in Section 3-106.2 of these regulations. Furthermore, the public ways extending access to the new lots shall be improved to a minimum of having the base layer of pavement installed as well as the public water, sewer, and storm drainage facilities having been installed, inspected, and approved by the Director of Utilities or the appropriate utility district representative and the Director of Public Works or his designee. At the discretion of the Director of Public Works, building permits may be issued without the base layer of pavement being installed when the following conditions are met:

1. The base layer of stone and all water, sewer, and storm drainage facilities are installed, inspected, and approved as appropriate; and
2. The sites/lots for which permits are requested are within 500 feet of a paved roadway; and
3. The date of the permit request is between December 1 and March 31.

The number of building permits allowed to be issued in this manner will be no more than 5 per subdivision. If at any time the Director of Public Works determines adequate vehicular access is not being maintained for police and fire equipment, building inspections and permits will be suspended in that subdivision until such deficiencies are remedied to the satisfaction of the Director of Public Works.

(2) The public ways extending access to the new lots shall be improved to a minimum of having the base layer of pavement installed prior to the issuance of a certificate of occupancy. The developer shall, prior to the signing of the final plat by the Secretary of the Commission, submit monies in escrow and/or letter of credit/performance agreement to the governing body in a sum to be determined by the Director of Public Works and the Director of Utilities for any remaining incomplete improvements or facilities.

ARTICLE 8

ADOPTION OF REGULATIONS AND AMENDMENTS

8-101 Original Enactment -- In order that land shall be subdivided in accordance with the objectives and standards set forth in these regulations, these subdivision regulations are hereby adopted this ____ day of _____, 20__, and immediately shall be in full force and effect. Pursuant to Section 13-4-303, Tennessee Code Annotated, a public hearing was held on these regulations on _____ __, 20__ at ____ p.m. at Town Hall in Smyrna, Tennessee, notice of which was given in a newspaper of general circulation on _____ __, 20__.

_____ _____
Chairman Date

ATTEST:

_____ _____
Secretary Date

APPENDIX

POST-ADOPTION AMENDMENTS

---

[1] Amended November 2003.
[2] Amended May 2007.
[3] Ibid.
[4] Ibid.
[5] Ibid.
[6] Ibid.
[7] Ibid.
[8] Ibid.
[9] Ibid.
[10] Ibid.
[11] Ibid.
[12] Ibid.
[13] Amended July 2002.
[14] Amended March 2006.
[15] Ibid.
[16] Amended November 2003.
[17] Ibid.
[18] Amended May 2005.